STRATEGIC FINANCIAL MANAGEMENT

Group - III
Paper - XIV

THE INSTITUTE OF COST ACCOUNTANTS OF INDIA
(Statutory body under an Act of Parliament)
www.icmai.in

SYLLABUS - 2016

WORK BOOK

STRATEGIC FINANCIAL MANAGEMENT

FINAL

GROUP – III

PAPER – 14

The Institute of Cost Accountants of India
(Statutory body under an Act of Parliament)
www.icmai.in

First Edition : March 2018

Revised Edition : March 2019

Published By :

Directorate of Studies

The Institute of Cost Accountants of India

CMA Bhawan, 12, Sudder Street, Kolkata – 700 016

www.icmai.in

Copyright of these study notes is reserved by the Institute of Cost Accountants of India and prior permission from the Institute is necessary for reproduction of the whole or any part thereof.

Preface

Professional education systems around the world are experiencing great change brought about by the global demand. Towards this end, we feel, it is our duty to make our students fully aware about their curriculum and to make them more efficient.

Although it might be easy to think of the habits as a set of behaviours that we want students to have so that we can get on with the curriculum that we need to cover. It becomes apparent that we need to provide specific opportunities for students to practice the habits. Habits are formed only through continuous practice. And to practice the habits, our curriculum, instruction, and assessments must provide generative, rich, and provocative opportunities for using them.

The main purpose of this volume is to disseminate knowledge and motivate our students to perform better, as we are overwhelmed by their response after publication of the first edition. Thus, we are delighted to inform our students about the **e-distribution of the second edition of our 'Work book'.**

This book has been written to meet the needs of students as it offers the practising format that will appeal to the students to read smoothly. Each chapter includes unique features to aid in developing a deeper under-standing of the chapter contents for the readers. The unique features provide a consistent reading path throughout the book, making readers more efficient to reach their goal.

Discussing each chapter with illustrations integrate the key components of the subjects. In the second edition, we expanded the coverage in some areas and condensed others.

It is our hope and expectation that this second edition of work book will provide further an effective learning experience to the students like the first edition.

The Directorate of Studies,

The Institute of Cost Accountants of India

STRATEGIC FINANCIAL MANAGEMENT

FINAL

GROUP – III

PAPER – 14

INDEX

Sl. No.		Page No.
1	Investment Decisions, Project Planning and Control	1 – 21
2	Evaluation of Risky Proposals for Investment Decisions	22 – 35
3	Leasing Decisions	36 – 48
4	Institutions in Finance Markets	49 – 52
5	Instruments in Financial Markets	53 – 65
6	Capital Markets	66 – 70
7	Commodity Exchange	71 – 74
8	Security Analysis & Portfolio Management	75 – 92
9	Financial Risks	93 – 95
10	Financial Derivatives–Instruments for Risk Management	96 – 109
11	Financial Risk Management in International Operations	110 – 122

Suggested Marks Distribution from Examination Point of View

Only for Practice Purpose

Total 100 Marks	3 Hours	MCQ = 20 Marks
		Others = 80 Marks

Objective Question

20 Marks (2 Marks each questions)	MCQ	1 mark for correct answer
		1 mark for justification

Short Notes / Case Study

Minimum Marks for each Questions	3 Marks
Maximum Marks for each Questions	10 Marks

Practical Problem

Minimum Marks for each Questions	4 Marks
Maximum Marks for each Questions	16 Marks

Study Note – 1

INVESTMENT DECISIONS, PROJECT PLANNING AND CONTROL

Section – A : Investment Decisions

Learning Objective: ***After studying this chapter, the students will be able to:***

- ***Calculate, interpret, and evaluate problems on investment decisions under different methods of appraisal.***

1. Choose the correct alternative:

(i) If the cost of an investment is ₹25000 and it results in a net cash inflow of ₹1800 per annum forever, the Net Profitability Index of the investment is _____(assume a discount rate of 8%)

(a) 0.9

(b) (-) 0.1

(c) 1.11

(d) 0.8

(ii) A project has the following cash flows:

Year	0	1	2	3
Cash Flow (₹ Lakh)	-25	30	-15	40

If discount rate is 20%, then the NPV of the project is_____

(a) 11.75

(b) 12.34

(c) 12.74

(d) 11.50

(iii) A project with an initial investment of ₹ 100 lakhs and life of 10 years generates cash flows after tax (CFAT) of ₹ 20 lakh per annum. The Payback Reciprocal is _____

(a) 25%

(b) 20%

(c) 10%

(d) 30%

(iv) The NPV of a 5 year project is ₹ 250 lakh and PVIFA at 10% for 5 years is 3.79. The Equivalent Annual Benefit of the project is _____

(a) ₹ 65.96 lakh

(b) ₹ 947.5lakh

(c) ₹ 56.96 lakh

(d) ₹ 96.65 lakh

(v) For an investment project, the following information is available.

Annual Cost Savings = ₹ 400000; IRR = 15%; Useful life = 4 years; PVIFA (15%, 4) = 2.85.

Initial investment = ₹ 114000, The Discounted Payback Period is _____

(a) 2.85 years

(b) 2.89 years

(c) 3.54 years

(d) 2.95 years

(vi) The following information is available in case of an investment proposal:

NPV at discounting rate of 10% = ₹ 1250 and NPV at discounting rate of 11% = ₹ (-) 200. The IRR of the proposal is_____

(a) 11.86%

(b) 10.86%

(c) 9.87%

(d) 11.96%

(vii) The Profitability Index of a project is 1.28 and its cost of investment is ₹ 250000. The NPV of the project is _____

(a) ₹ 75000

(b) ₹ 80000

(c) ₹ 70000

(d) ₹ 65000

(viii) From the following information calculate the MIRR of the project.

Initial Outlay ₹ 50000, cost of capital 12% p.a., Life of the project 4 years, Aggregate future value of cash flows ₹ 104896.50.

(a) 20.35%

(b) 21.53%

(c) 31.25%

(d) 12.25%

(ix) The IRR of a project is 10%. If the annual cash flow after tax is ₹ 130000 and project duration is 4 years, what is the initial investment in the project?

(a) ₹ 4,10,000

(b) ₹ 4,12,100

(c) ₹ 3,90,000

(d) ₹ 4,05,000

(x) The NPV of a 4 year project is ₹ 220 lakh and PVIFA at 12% for 4 years is 3.037. The Equivalent Annual Benefit of the project is _____

(a) ₹ 66.52 lakh

(b) ₹ 94.74lakh

(c) ₹ 66.96 lakh

(d) ₹ 76.65 lakh

(xi) The Gross Profitability Index of a project is 1.52 and its NPV is ₹ 52000, The cost of investment of the project is _____

(a) ₹ 110000

(b) ₹ 100000

(c) ₹ 95000

(d) ₹ 105000

(xii) If Annual CFAT is ₹ 540000, Project life is 4 years and initial cost is ₹ 1980000, what is the Payback Profitability of the project?

(a) ₹ 160000

(b) ₹ 195000

(c) ₹ 180000

(d) ₹ 120000

Answer:

Question.	(i)	(ii)	(iii)	(iv)	(v)	(vi)	(vii)	(viii)	(ix)	(x)	(xi)	(xii)
Answer:	(b)	(c)	(b)	(a)	(a)	(b)	(c)	(a)	(b)	(a)	(b)	(c)

PROJECT EVALUATION USING PAYBACK PERIOD:

2. The present output details of manufacturing department of X Ltd. are as follows:

Average output per week 48,000 units

Saleable value of output ₹ 60,000

Contribution made by above ₹ 24,000

The management plan to introduce more mechanisation in the department at a capital cost of ₹16,000. As an effect of this the number of employees will be reduced from the existing strength of 160 nos. to 120 nos. but the output of individual employee will increase by 60%. As an incentive to achieve the extra output, the management propose to offer an one *per cent* increase in the existing piece work price of Re. 0.10 per article for every 2% increase in the individual output achieved, hi order to sell the increased output, it will be necessary to reduce the sale price by 4%.

You are required to calculate extra weekly contribution resulting from the proposed changes, as above, and give your recommendation.

Answer:

Current output per employee per week	48,000 units,/160 Nos. = 300 units
Output per employee per week after mechanisation	300 units × 160/100 = 480 units
Total production after mechanisation	480 units × 120 employees = 57,600 units
Current selling price	₹ 60,000/48,000 units - ₹ 1.25
Revised selling price	₹ 1.25 × 96/100 = ₹ 1.20

Calculation of Revised Piece Rate Wages

Current rate	Re. 0.10
Incentive @ Re. 0.05 p.u. for 60% increase in output	0.03
	0.13

Calculation of Variable Cost Per Unit	(₹)
Sales	60,000
Less: Contribution	24,000
Variable cost including wages	36,000
Less: Wages (48,000 units X Re. 0.10)	4,800
Variable cost excluding wages	31,200

Variable cost {excluding wages) p.u. = ₹ 31,200/48,000 units = Re. 0.65 p.u.

Revised Profitability Statement After Mechanisation (₹)

Sales (57,600 units @ ₹ 1.20)		69,120
Less: Variable cost		
Wages @ Re. 0.13	7,488	
Other Expenses @ Re. 0.65	37,440	
		44,928
Contribution		24,192
Current contribution		24,000
Increase in contribution per week		192

Payback Period=Additional Investment/Incremental contribution per week

= ₹ 16,000/₹ 192 = 83.3 weeks or 1.6 years

PROJECT EVALUATION USING PAYBACK PERIOD AND NPV:

3. An oil company proposes to install a pipeline for transport of crude from wells to refinery. Investments and operating costs of the pipeline vary for different sizes of pipelines (diameter). The following details have been conducted:

(a) Pipeline diameter (in inches)	**3**	**4**	**5**	**6**	**7**
(b) Investment required (₹ lakhs}	**16**	**24**	**36**	**64**	**150**
(c) Gross annual savings in operating costs before depreciation (₹ lakhs)	**5**	**8**	**15**	**30**	**50**

The estimated life of the installation is 10 years. The oil company's tax rate is 50%. There is no salvage value and straight line rate of depreciation is followed.

Calculate the net savings after tax and cash flow generation and recommend therefrom, the largest pipeline to be installed, if the company desires a 15% post-tax return. Also indicate which pipeline will have the shortest payback. The annuity PV factor at 15% for 10 years is 5.019.

Answer:

(1) Determination of CFAT

(₹ lakhs)

Pipeline Diameter (inches)	Gross savings p.a.	Savings after tax	Depreciation	Tax shield on depreciation	Total cost savings (CFAT)
		(2)× 50%		(4) X 50%	(3) + (5)
(1)	(2)	(3)	(4)	(5)	(6)
3	5	2.5	1.6	0.8	3.3
4	8	4.0	2.4	1.2	5.2
5	15	7.5	3.6	1.8	9.3
6	30	15.0	6.4	3.2	18.2
7	50	25.0	15.0	7.5	32.5

(2) Payback Period in years

Inches	₹ lakhs	Years
3	16/3.3	4.848
4	24/5.2	4.615
5	36/9.3	3.871
6	64/18.2	3.516
7	150/32.5	4.615

Therefore, Pipeline diameter of 6inches has shortest payback period.

(3) Determination of NPV

(₹ lakhs)

Pipeline dia. (inches)	CFAT for 10 years	PV factor @15% 10 Years	Total PV	Cash Outflow	NPV
3	3.3	5.019	16.5627	16	0.5627
4	5.2	5.019	26.0988	24	2.0988
4	9.3	5.019	46.6767	36	10.6767
6	18.2	5.019	91.3458	64	27.3458
7	32.5	5.019	163.1175	150	13.1175

Suggestion: Pipeline of 6 inches diameter has highest NPV and it is recommended for installation.

PROJECT EVALUATION USING NPV METHOD:

4. GFM produces two products - a main product Cp and a co-product Dg. For their main product Cp there is a 100% buy back arrangement with their foreign collaborators. Recently GFM doubled their capacity and with this their production capacity for the co-product Dg increased to 10,000 MT per annum. Fortunately, there was an unprecedented increase in demand for Dg and price too has increased significantly to ₹ 1000 per tonne.

However with delicensing and liberalisation, more and more units for manufacturing Cp and Dg are being set up in the country. GFM, therefore, anticipates stiff competition for Dg from next financial year. For maintaining sales at current level *(i.e.,* 10,000 MT per year) GFM will have to drop the price by ₹ 50 per MT every year for the next 5 years when prices are likely to stabilise at pre-boom level of ₹ 750 per MT.

The Vice-President (Marketing) who, sensing this situation, has just completed a market study, suggests that the Company revive and earlier project for converting Dg into Dp grade and starting with 1,000 MT from next year increase production of Dp in stages of 1,000 MT every year by correspondingly reducing Dg. The Production Manger estimates that the additional variable cost for Dp will be ₹ 200 per MT. V.P. (Marketing) feels that Dp can be sold at ₹ 1,500 per MT but in the first two years a discounted price of ₹ 1,400 in year 1 and ₹1,450 in year *2* will have to be fixed. With partial conversion into Dp, the drop in price of Dg can also be contained at ₹ 25 MT instead of ₹ 50 envisaged. Production facilities for Dp involves a capital outlay of ₹ 50 lakhs.

Present the projected sales volume and price of products Dg and Dp for the next 5 years under two alternatives.

If GEM normally appraises investments @ 12% p.a. and if cash beyond 5 years from investment are ignored, advise whether Dp should be produced.

Answer:

Part I: Projected Sales Volume and Prices

Year	Alternative I			Alternative II		
	Dg qty. (MT)	Price (₹)	Dg. qty. (MT)	Price (₹)	Dp. qtv. (MT)	Price (₹)
1	10,000	950	9,000	975	1,000	1,400
2	10,000	900	8,000	950	2,000	1,450
3	10,000	850	7,000	925	3,000	1,500
4	10,000	800	6,000	900	4,000	1,500
5	10,000	750	5,000	875	5,000	1,500

Part II: For the revival of the earlier project for converting Dg partially into Dp the PV of the expected additional contribution, if any, from Alternative II over that from Alternative I has to be considered.

Year wise Contributions							
Year	**Incremental contribution from Dg**			**Incremental contribution from Dp**			**Total (₹ lakhs) (a+b)**
	(Qtv. MT)	(₹/MT)	(₹ lakhs) (a)	(Qtv. MT)	(Rs/MT)	(₹ lakhs) (b)	
1	9,000	25*	2.25	1,000	250**	2.50	4.75
2	8,000	50	4.00	2,000	350	7.00	11.00
3	7,000	75	2.25	3,000	450	13.50	15.75
4	6,000	100	6.00	4,000	500	20.00	26.00
5	5,000	125	6.25	5,000	550	27.50	33.75

Working Notes:

* Incremental selling price = 975 - 950 = ₹ 25

** Incremental selling price - Incremental variable cost = (1,400 - 950) - 200 = ₹ 250 and so on.

Calculation of total PV

Year	Incremental contribution (₹ lakhs)	D.P. @12%	Present value (₹ lakhs)
1	4.75	0.8929	4.24
2	11.00	0.7972	8.77
3	15.75	0.7118	11.21
4	26.00	0.6355	16.52
5	33.75	0.5674	19.15
			59.89

NPV = 59.89 - 50 = ₹ 9.89 lakhs

Suggestion: Hence it will be advisable to start conversion of Dg into Dp proposed.

5. A particular project has a four-year life with yearly projected net profit of ₹ 10,000 after charging yearly depreciation of ₹ 8,000 in order to write-off the capital cost of ₹ 32,000. Out of the capital cost ₹ 20,000 is payable immediately (Year 0) arid balance in the next year (which will be the year 1 for evaluation). Stock amounting to ₹ 6,000 (to be invested in year 0} will be required throughout the project and for debtors a further sum of ₹ 8,000 will have to be invested in year 1. The working capital will be recouped in year 5. It is expected that the machinery will fetch a residual value of ₹ 2,000 at the end of 4th year. Income tax is payable @ 40% and the Depreciation equals the taxation writing down allowances of 25% per annum. Income tax is paid after 9 months after the end of the year when profit is made. The residual value of ₹ 2,000 will also bear tax (a 40%. Although the project is for 4 years, for computation of tax and realisation of working capital, the computation will be required up to 5 years.

Taking discount factor of 10%, calculate NPV of the project and give your comments regarding its acceptability.

Answer:

Calculation of NPV of Project

Particulars	Year					
	0	1	2	3	4	5
Capital expenditure	(20,000)	(12,000)	-	-	-	-
Working capital	(6,000)	(8,000	-	-	-	-
Net profit	-	10,000	10,000	10,000	10,000	-
Depreciation add back	-	8,000	8,000	8,000	8,000	-
Tax	-	-	(4,000)	(4,000)	(4,000)	(4,800)
Salvage value	-	-	-	-	2,000	-
Recovery of working capital	-	-	-	-	-	14,000
Net cash inflow	(26,000)	(2,000)	14,000	14,000	16,000	9,200
Discount factor (a 10%	1.000	0.9091	0.8264	0.7513	0.6830	0.6209
Present values	(26,000)	(1,818)	11,570	10,518	10,928	5,712

Suggestion: Since NPV is ₹ 10,910, it is suggested to accept the proposal.

* Working capital figures are computed as follows:

	0	1	2	3	4	5
Working Capital Stock	0	6000	6000	6000	6000	
Working Capital Stock Investment	- 6000	0	0	0		
Working Capital Debtor		0	8000	8000	8000	
Working Capital Debtor Investment		- 8000	0	0		
Salvage Working Capital						14000

6. T Ltd. has specialised in the manufacture of a particular type of transistors. Recently, it has developed a new model and is confident of selling all the 8,000 units (new product) that would be manufactured in a year. The required capital equipment would cost ₹ 25 lakhs and that would have an economic life of 4 years with no significant salvage value at the end of such period. During the first four years, the promotional expenses would be as planned below:

(₹)

Year	1	2	3	4
Expenses				
Advertisement	1,00,000	75,000	60,000	30,000
Others	50,000	75,000	90,000	1,20,000

Variable costs of producing and selling a unit would be ₹ 250. Additional fixed operating costs to be incurred because of this new product are budgeted at ₹ 75,000 per year. The management expects a discounted return of 15% (after tax) on investments in the new product. You are required to work out an initial selling price per unit of the new product that may be fixed with a view to obtaining the desired return on investment. Assume a tax rate of 40% and use of straight line method of depreciation for tax purpose.

Note: The present value of annuity of Re. 1 received or paid in a steady stream throughout the period of four years in the future at 15% is 3.0079.

Answer:

Let the initial selling price per unit of new product be *x*

Total sales = 8,000 units × x = 8000x.

Calculation of Cash Costs p.a. (₹)

Variables costs (8,000 units X ₹ 250)	20,00,000
Advertisement and other expenses	1,50,000
Additional Fixed operating costs	75,000
Total cash costs p.a.	22,25,000

Depreciation p.a.	= ₹ 25,00,000/4 years	₹ 6,25,000 p.a.
Profit before tax	= 8,000x - (22,25,000 + 6,25,000)	8,000.x - 28,50,000
Tax (@ 40% on profit)	= 0.40 (8,000x - 28,50,000)	3,200.x- 11,40,000
Total cash outflow	= 22,25,000 + 3,200x - 11,40,000	3,200.x + 10,85,000
Net annual cash inflow	= 8,000x - (3,200x + 10,85,000)	4,800.x- 10,85,000

Initial cash outflow = Present value of cash inflow
₹ 25,00,000 = (4,800.x - 10,85,000) X 3.0079
25,00,000 = 14,438.x - 32,63,571.50
14,438x = 25,00,000 + 32,63,571.50
14,438x = 57,63,571.50
x = 57,63,571.50/14,438 = ₹ 399.20

Hence, the initial selling price of new product is ₹ 399.20 per unit.

7. Modern Enterprises is considering the purchase of a new Computer System at a cost of ₹ 35 lakhs for its Research and Development (R & D) Division. The cost of operation and maintenance (excluding depreciation) will be ₹ 7 lakhs per annum. The useful life of the system will be 6 years after which it will have a disposal value of ₹ 1 lakh. With the installation of the system there will be a reduction in running cost of ₹ 1 lakh per month in the R & D Division.

Moreover, the company is expected to receive ₹ 9 lakh immediately by disposal of some existing equipments and furniture.

Capital expenditure in R & D will attract 100% write off for tax purpose. The effective tax rate of the company may be taken as 50%. The gains arising from disposal of equipments and furniture are to be considered as free of tax.

Taking the average cost of capital of the company as 12%, you are required to advise financial viability of the proposal.

Answer:

	(₹)
Investment in 0th year:	35.00
Cost of new computer system	9.00
Less: Net realisation from disposal	26.00
Annual cash flow:	
Annual saving in expense (1 lakh saving/per month * 12 months)	12.00
Less: Maintenance cost	7.00
	5.00
Net saving after tax @ 50%	2.50

Statement showing the present value of cash flow of the proposal (₹ lakhs)

Particulars	Year	Amount	Factor	Total present value
Investment	0	(26.00)	1.000	(26.00)
Tax saving	1	17.50 (DT on 100 % write off 35*0.5)	0.892	15.61
Annual Net Savings		2.50	0.892	2.23
	2	2.50	0.797	1.99
	3	2.50	0.711	1.78
	4	2.50	0.635	1.59
	5	2.50	0.567	1.42
	6	2.50	0.506	1.27
Salvage		1.00	0.506	0.51
Net present value				0.40

The NPV being positive, the proposal is accepted.

8. A company is considering a cost saving project. This involves purchasing a machine costing ₹ 7,000, which will result in annual savings on wage costs of ₹ 1,000 and on material costs of ₹ 400.

The following forecasts are made of the rates of inflation each year for the next 5 years:

Wages costs 10%, Material costs 5%, General prices 6%

The cost of capital of the company, in monetary terms, is 15%.

Evaluate the project, assuming that the machine has a life of 5 years and no scrap value.

Answer:

Calculation of Net Present Value

Year	Labour cost savings (₹)	Material Costs Savings. (₹)	Total savings (₹)	DCF	Present values @ 15% (₹)
1	1000 X (1.1) = 1,100	400 X (l.05) = 420	1,520	0.870	1,322
2	1000 X $(l.l)^2$ = 1,210	400 X$(l.05)^2$ = 441	1,651	0.756	1,255
3	1000 X $(1.1)^3$ = 1,331	400 X$(l.05)^3$ = 463	1,794	0.658	1,184
4	1000X $(1.1)^4$ = 1,464	400 X$(l.05)^4$ = 486	1,950	0.572	1,112
5	1000X $(1.1)^5$ = 1,610	400 X$(l.05)^5$ = 510	2,120	0.497	1,060
Present value of total savings					5,933
Less. Initial cash outflow					7,000
NPV					(-) 1,067

Suggestion: Since the present value of cost of project exceeds the cost of savings from it and hence it is not suggested to purchase the machine.

9. ABC Enterprises Ltd. is evaluating an option to computerise their distribution system. The total capital cost for the system is ₹100 lakhs. The operation and maintenance costs (excluding depreciation) per annum is expected to be ₹ 10 lakhs. The computer system is expected to have an useful life of 5 years after which it is expected to become obsolete and would require replacement. It would have negligible salvage value at that time. The depreciation rate is 10 per cent on written down value method. There would a cost savings of ₹10 lakhs due to reduction in clerical numbers, ₹20 lakhs due to space released and ₹10 lakhs on account of inventory reduction. Previous trends indicate that costs are inflating at 10% per annum. The tax rate for the firm is 50%. Advice whether the company should invest in the Computer system.

Answer:

Calculation of Depreciation (₹ lakhs)

Year	**1**	**2**	**3**	**4**	**5**
WDV at the beginning	100	90	81	72.9	65.61
Less: Depreciation	10	9	8.1	7.29	6.561
WDV at the end	90	81	72.9	65.61	59.049

Calculation of NPV (₹ lakhs)

Year	**1**	**2**	**3**	**4**	**5**
Savings:					
Reduction in labour cost	10.00	11.00	12.10	13.31	14.64
Reduction in space	20.00	22.00	24.20	26.62	29.28
Savings in inventory	10.00	11.00	12.10	13.31	14.64
	40.00	44.00	48.40	53.24	58.56
Costs:					
Operation and maintenance	10.00	11.00	12.10	13.31	14.64
Depreciation	10.00	9.00	8.10	7.29	6.56
	20.00	20.00	20.20	20.60	21.20
Net savings	20.00	24.00	28.20	32.64	37.36
Less : Tax @50%	10.00	12.00	14.10	16.32	18.68
	10.00	12.00	14.10	16.32	18.68
Add: Depreciation	10.00	9.00			
Cash inflow after tax	20.00	21.00	22.20	23.61	25.24
Discount factor	0.909	0.826	0.751	0.683	0.621
Present values	18.18	17.35			

Total present value of cash inflows = ₹ 84 lakhs

NPV = ₹ 84 lakhs - ₹ 100 lakhs = (-) ₹16

Analysis: Since NPV is negative, it is suggested not to invest in computerisation of distribution system.

10. Apex Enterprises is interested in assessing the cash flows associated with the replacement of the old machine by a new machine. The old machine has a book value of ₹ 90,000 which can be sold for the same amount. It has a remaining life of 5 years, after which the salvage value is expected to be *'nil'*. It is being depreciated annually @ 10% using the written down value method.

The new machine costs ₹ 4 lakhs, and has a resale value of ₹ 2.5 lakhs at the end of 5 years. The new machine is expected to save manufacturing costs of ₹ 1 lakh p,a. Investment in working capital remains same. The tax rate applicable to the firm is 50%.

You, as a Project Analyst, are required to work out the incremental cashflows associated with the replacement of the old machine and to prepare a statement to be presented to the management for consideration.

Answer:

Cash outflow	(₹ lakhs)
Cost of the machine (new)	4.00
Less: Sale value of old machine	(0.90)
	3.10

Incremental Depreciation (₹ lakhs)

Year	WDV	Depreciation (@ 10%)
1	3.1000	0.3100
2	2.7900	0.2790
3	2.5110	0.2511
4	2.2599	0.2260
5	2.0339	0.2034

Statement Showing Incremental Cashflows and CFAT associated with Replacement of Old Machine with a New Machine

(₹ lakhs)

Particulars	**Year 1**	**Year 2**	**Year 3**	**Year 4**	**Total**	
Savings in manufacturing cost	1.0000	1.0000	1.0000	1.0000	1.0000	
Less: Incremental depreciation	0.3100	0.2790	0.2511	0.2260	0.2034	
Incremental taxable income	0.6900	0.7210	0.7489	0.7740	0.7966	
Less: Tax @ 50%	0.3450	0.3605	0.3744	0.3870	0.3983	
Incremental earning after tax (EAT)	0.3450	0.3605	0.3745	0.3870	0.3983	
CFAT (EAT + Depreciation)	0.6550	0.6395	0.6256	0.6130	0.6017	

Add : Salvage value	-	-	-	-	2.5000	
Total Incremental CFAT	0.6550	0.6395	0.6256	0.6130	3.1017	5.6348
Less : Cash outflows						3.1000
Incremental net cash flows						2.5348

Suggestion: In view of positive incremental net cash flows, it is suggested to replace the existing machine.

REPLACEMENT DECISION:

11. A machine used on a production line must be replaced at least every four years. The costs incurred in running the machine according to its age are:

(₹)

Age of machine (years)	**0**	**1**	**2**	**3**	**4**
Purchase price	**3,000**				
Maintenance		**800**	**900**	**1,000**	**1,000**
Repairs			**200**	**400**	**800**
Net Realisable value		**1,600**	**1,200**	**800**	**400**

Future replacement will be identical machines with the same costs. Revenue is unaffected by the age of the machine. Assume there is no inflation and ignore tax. The cost of capital is 15%. Determine the optimum replacement cycle.

Cost of capital - 14%	**1**	**2**	**3**	**4**
P.V. factors @ 15%	**0.8696**	**0.7561**	**0.6575**	**0.5718**
P.V. of annuity @ 15%	**0.8696**	**1.6257**	**2.2832**	**2.8550**

Answer:

The possible replacement options of the machine are every one, two, three and four years. The annual equivalent cost of each of these replacement policies are as follows:

Replacement Every Year

Year	**0**	**1**
Cost	(3,000)	-
Maintenance	-	(800)
Resale value	-	1600
Total	(3000)	800
DCF @ 15%	1.0	0.8696
Present value **of cash flows**	(3000)	696

Total present value of costs = ₹ 2,304

Annual equivalent cost = ₹ 2,304/0.8696 = ₹ 2,649

Replacement Every Two Years

Year	0	1	2
Cost	(3000)	-	-
Maintenance	-	(800)	(900)
Repairs	-	-	(200)
Resale value	-	-	1200
Total	(3000)	(800)	100
DCF @ 15%	1.0	0.8696	0.7561
Present value of cash flows	(3000)	(696)	76

Total present value of costs = ₹ 3,620

Annual equivalent cost = ₹ 3,620/1.6257 = ₹ 2,227

Replacement every three years

(₹)

Years	0	1	2	3
Cost	(3,000)	•	-	-
Maintenance	-	(800)	(900)	(1,000)
Repairs	-	-	(200)	(400)
Net realisable value	-	-	-	800
Total	(3,000)	(800)	(1,100)	(600)
DCF @ 15%	1.000	0.8696	0.7561	0.6575
Present value of cash flows	(3,000)	(696)	(832)	(395)

Total present value of costs = ₹ 4,923

Annual equivalent cost = ₹ 4,923/2.2832 = ₹ 2,156

Replacement every four years

(₹)

Years	0		1	2	3
Cost	(3,000)	-	-	-	-
Maintenance	-	(800)	(900)	(1,000)	(1000)
Repairs	-	-	(200)	(400)	(800)
Net realisable value	-	-	-	-	400
Total	(3,000)	(800)	(1,100)	(1400)	(1400)
DCF @ 15%	1.000	0.8696	0.7561	0.6575	0.5718
Present value of cash flows	(3,000)	(696)	(832)	(921)	(800)

Total present value of costs = ₹ 6,249

Annual equivalent cost = ₹ 6,249/2.8550 = ₹ 2,189

Suggestion: Since, annual equivalent cost is the minimum in three years, the machine is suggested to be replaced every three years.

12. Company has to replace one of its machines which has become unserviceable. Two options are available:

(i) A more expensive machine (EM) with 12 years of life, (ii) A less expensive machine (LM) with 6 years of life.

If machine LM is chosen, it will be replaced at the end of 6 years by another LM machine. The pattern of maintenance, running costs and prices are as under:

(₹)

Particulars	EM	LM
Purchase price	10,00,000	7,00,000
Scrap value at the end of life	1,50,000	1,50,000
Overhauling is due at the end of	8th year	4th year
Overhauling costs	2,00,000	1,00,000
Annual repairs	1,00,000	1,40,000

Cost of capital - 14%

You are required to recommend with supporting calculations which of the machines should be purchased. Present Value factors are:

End of 4th year	0.5921
End of 6th year	0.4556
End of 8th year	0.3506
End of 12th year	0.2076
Years 1 to 6	3.8890
Years 1 to 12	5.6600

Answer:

Machine EM - 12 years life

Particulars	Year	Cost (₹)	Discount factor	Present value (₹)
Purchase price	0	10,00,000	1.0000	10,00,000
Overhauling	8	2,00,000	0.3506	70,120
Annual repairs	1 – 12	1,00,000	5.6600	5,66,000
Scrap value	12	1,50,000	0.2076	(31,140)
Total NPV of outflow				16,04,980

Machine LM-6 years life

Particulars	Year	Cost (₹)	Discount factor	Present value (₹)
Purchase price	0	7,00,000	1.0000	7,00,000
Overhauling	4	1,00,000	0.5921	59,210
Annual repairs	6	1,40,000	3.8890	5,44,460
Scrap value	6	1,50,000	0.4556	(68,340)
Total NPV of outflow				12,35,330

Annualized value

EM = ₹ 16,04,980/5.660 = ₹ 2,83,565 LM = ₹ 12,35,330/3.889= ₹ 3,17,647

Since annualised value is less for more expensive machine, it is suggested to replace existing machine with machine EM.

PROBLEMS ON CAPITAL RATIONING:

13. Five Projects M, N, O, P and Q are available to a company for consideration. The investment required for each project and the cash flows it yields are tabulated below. Projects N and Q are mutually exclusive. Taking the cost of capital @ 10%, which combination of projects should be taken up for a total capital outlay not exceeding ₹3 lakhs on the basis of NPV and Benefit-Cost Ratio (BCR)?

(₹)

Project	Investment	Cash flow p.a.	No. of years	P.V. @10%
M	**50,000**	**18,000**	**10**	**6.145**
N	**1,00,000**	**50,000**	**4**	**3.170**
O	**1,20,000**	**30,000**	**8**	**5.335**
P	**1,50,000**	**40,000**	**16**	**7.824**
Q	**2,00,000**	**30,000**	**25**	**9.077**

Answer:

Total capital outlay = ₹ 3.00 lakhs

Computation of Net Present Value and Benefit-Cost Ratio for five Projects

(₹)

Project	Investment	Cash flow p.a.	No. of years.	P.V. @ 10%	P.V.	NPV	BCR (PV/Investment
M	50,000	18,000	10	6.145	1,10,610	60,160	2.212
N	1,00,000	50,000	4	3.170	1,58,500	58,500	1.585
O	1,20,000	30,000	8	5.335	1,60,050	40,050	1.334
P	1,50,000	40,000	16	7.824	3,12,960	1,62,960	2.086
Q	2,00,000	30,000	25	9.077	2,72,310	72,310	1.362

Statement Showing Feasible Combination of Projects and their NPV, BCR

Feasible combination of projects	Investment (₹)	NPV (₹)	Rank	BCR	Rank
(i) M, N and P	3.00,000	2,82,070	1	1.940	1
(ii) M, N and O	2,70,000	1,59,160	4	1.589	4
(iii) O & P	2,70,000	2,03,010	3	1.752	3
(iv) M & Q	2,50,000	1,32,920	5	1.532	5
(v) N&P	2,50,000	2,21,460	2	1.886	2
(vi) N&Q	3,00.000	1,30,810	6	1.436	6

Comment - The optimum combination of projects, is Projects M, N and P with total investment of ₹ 3.00 lakhs since it has highest NPV & BCR of ₹ 2,82,070 and 1.940 respectively. Hence, the same should be taken up.

14. S Ltd. has ₹ 20,00,000 allocated for capital budgeting purposes. The following proposals and associated profitability indexes have been determined:

Project	Amount (₹)	Profitability Index
1	**6,00,000**	**1.22**
2	**3,00,000**	**0.95**
3	**7,00,000**	**1.20**
4	**9,00,000**	**1.18**
5	**4,00.000**	**1.20**
6	**8,00,000**	**1.05**

Which of the above investments should be undertaken? Assume that projects are indivisible and there. Is no alternative use of the money allocated for capital budgeting.

Answer:

Statement Showing Ranking based on NPV of Projects

Project	Amount (₹)	Profitability Index	PV of Cash inflow	NPV
(1)	(2)	(3)	(4) = (2)*(3)	(5)=(4)-(2)
1	6,00,000	1.22	732000	132000
2	3,00,000	0.95	285000	(-)15000
3	7,00,000	1.20	840000	140000
4	9,00,000	1.18	1062000	162000
5	4,00.000	1.20	480000	80000
6	8,00,000	1.05	840000	40000

Selection of projects: Under NPV method (assuming the projects are indivisible and there is no alternative use of unutilized amount), projects 3, 4 and 5 which will give a combined NPV of ₹ 382000 with no unutilized amount, should be selected. (*Detailed calculation of different alternative combinations must be given as per the previous problem*.)

PROBLEM ON IRR CALCULATION:

15. XYZ Ltd., an infrastructure company is evaluating a proposal to build, operate and transfer a section of 35 km. of road at a project cost of ₹ 200 crores to be financed as follows:

Equity share capital ₹ 50 crores, loans at the rate of interest of 15% p.a. from financial institutions ₹ 150 crores. The project after completion will be opened to traffic and a toll will be collected for a period of 15 years from the vehicles using the road. The company is also required to maintain the road during the above 15 years and after the completion of that period, it will be handed over to the Highway Authorities at zero value. It is estimated that the toll revenue will be ₹ 50 crores per annum and the annual toll collection expenses including maintenance of the roads will amount to 5% of the project cost. The company considers to write off the total cost of the project in 15 years on a straight line basis. For corporate Income-tax purposes the company is allowed to take depreciation @ 10% on WDV basis. The financial institutions are agreeable for the repayment of the loan in 15 equal annual instalments - consisting of principal and interest.

Calculate Project IRR and Equity IRR. Ignore corporate taxation. Explain the difference in Project IRR and Equity IRR.

Answer:

Road project cost = ₹ 200 crores

Financed by:

Equity share capital = ₹ 50 crores

Term loan from financial institutions @ 15% *p.a.* = ₹ 150 crores

Annual net cash inflow = ₹ 50 crores - *5%* of ₹ 200 crores = ₹ 40 crores

Maintenance of Road = 15 years

Salvage value at the end of 15 years = *Nil*

Calculation of IRR

Factor to be located = Original investment/ Average annual cash inflow = ₹ 200 crores/₹40 crores = 5.000

The present value annuity factor appearing nearest to 5.092 for 15 years @ 18%.

Calculation of NPV at 18%		(₹ crores)
P.V. of annual cash inflow	(40 × 5.092)	203.68
Initial cash outlay		200.00
NPV		3.68
Calculation of NPV at 19%		(₹ crores)
P.V. of annual cash inflow	(40 × 4.876)	
Initial cash outlay		195.04
NPV		200.00
		(4.96)

Now, the IRR of the project is ascertained by method of interpolation as follows:

$$IRR = 18\% + \frac{3.68}{3.68-(-4.96)} \times 1\% = 18.43\%$$

Study Note – 2

EVALUATION OF RISKY PROPOSALS FOR INVESTMENT DECISIONS

Learning Objective: ***After studying this chapter, the students will be able to:***

- ***Solve numerical problems on different ways of evaluating risk in investment proposals.***

1. Choose the correct alternative:

(i) If the cash flows over the life of the project are perfectly correlated, the Standard Deviation is determined using the formula _____

(a) $SD = \frac{\Sigma\sigma^2}{(1+i)^2}$

(b) $SD = \frac{\Sigma\sigma}{(1+i)^2}$

(c) $SD = \frac{\Sigma\sigma^2}{(i+i)}$

(d) $SD = \sum\frac{\sigma t}{(1+i)^t}$

(ii) If nominal discounting rate is 15%, inflation rate is 5%, then real discounting rate will be _____

(a) 9.52%

(b) 9.25%

(c) 10.25%

(d) 10.52%

(iii) If project cost = ₹ 12,000, Annual cash flow = ₹ 4,500 Cost of capital = 14%, life = 4 years, PVIFA (14%, 4) = 2.9137, then the sensitivity with respect to the project cost is

(a) 9.27%

(b) 10.27%

(c) 9.72%

(d) 10.72%

(iv) The following information is available with respect to Project X

NPV Estimate (₹)	30,000	60,000	1,20,000	1,50,000
Probability	0.1	0.4	0.4	0.1

The expected NPV will be _____

(a) ₹ 1,00,000

(b) ₹ 75,000

(c) ₹ 90,000

(d) ₹ 1,20,000

(v) If expected NPV = ₹ 1,20,000 and S.D = ₹ 30,000, then coefficient of variation will be _____

(a) 25%

(b) 20%

(c) 30%

(d) 50%

(vi) Given, expected value of profit without perfect information = ₹ 1,600 and expected value of perfect information = ₹ 300, then expected value of profit with perfect information will be _____

(a) ₹ 1300

(b) ₹ 1900

(c) ₹ 950

(d) None of the above

Answer:

Question.	(i)	(ii)	(iii)	(iv)	(v)	(vi)
Answer :	(d)	(a)	(a)	(c)	(a)	(b)

2. A company has estimated the following demand level of its product:

Sales volume (units)	10000	12000	14000	16000	18000
Probability	0.10	0.15	0.25	0.30	0.20

It has assumed that the sales price of ₹ 6 per unit, marginal cost ₹ 3.50 per unit, and fixed costs ₹ 34,000. What is the probability that: (a) the company will break-even in the period? (b) the company will make a profit of at least ₹ 10,000?

Answer:

To break-even, the company must earn enough total contribution to cover its fixed costs. The contribution to fixed costs and profit is ₹ 2.50 per unit (i.e. 6 - 3.5).

To break-even, sales must be as follows:

Contribution required/ Contribution per unit = ₹ 34,000/₹ 2.50 = 13600 units

The probability that sales will equal or exceed 13,600 units is the probability that sales will be 14,000, 16,000 or 18,000 units, which is (0.25 + 0.30 + 0.20) = 0.75 or 75%

To earn profit of ₹ 10,000, the company must earn enough contribution to cover its fixed costs (₹ 34,000) and then make the profit, so total contribution must be ₹ 44,000. To earn this contribution, sales must be as follows:

₹ 44,000/2.50 = 17,600 units

The probability that sales will equal or exceed 17,600 units is the probability of sales being 18,000 units, which is 0.20 or 20%.

3. A company has estimated the unit variable cost of a Product to be ₹ 10, and the selling price is ₹ 15 per unit. Budgeted sales for the year are 20,000 units. Estimated fixed costs are as follows:

Fixed costs p.a. (₹)	**50,000**	**60,000**	**70,000**	**80,000**	**90,000**
Probability	**0.1**	**0.3**	**0.3**	**0.2**	**0.1**

What is the probability that the company will equal or exceed its target profit of ₹ 25,000 for the year.

Answer:

The different outcomes for fixed cost are mutually exclusive events. If fixed costs are ₹ 50,000 for example, they can't be anything else as well.

Budgeted sales = 20,000 units

Budgeted unit contribution = 15 - 10 = ₹ 5

Budgeted total contribution (20,000 × 5)	100000
Target profit	25000
Maximum fixed costs if target is to be achieved	75000

The probability that fixed costs will be ₹ 75,000 or less is:

= P (50,000 or 60,000 or 70,000)

= P (50,000) + P (60,000) + P (70,000)

= 0.1+ 0.3 + 0.3

= 0.7 or 70%

4. The following table presents the proposed cash flows for projects M and N with their associated probabilities. Which project has a higher preference for acceptance?

	Project M		Project N	
Possibilities	**Cash flow (₹ lakhs)**	**Probability (₹ lakhs)**	**Cash flow (₹ lakhs)**	**Probability (₹ lakhs)**
1	**7,000**	**0.10**	**12,000**	**0.10**
2	**8,000**	**0.20**	**8,000**	**0.10**
3	**9,000**	**0.30**	**6,000**	**0.10**
4	**10,000**	**0.20**	**4,000**	**0.20**
5	**11,000**	**0.20**	**2,000**	**0.50**

Answer:

Calculation of Expected Value of Cash flow						(₹ lakhs)
		Project M		Project N		
Possibilities	Cash flow	Probability	Expected value	Cash flow	Probability	Expected value
1	7,000	0.1	700	12,000	0.10	1,200
2	8,000	0.2	1,600	8,000	0.10	800
3	9,000	0.3	2,700	6,000	0.10	600
4	10,000	0.2	2,000	4,000	0.20	800
5	11,000	0.2	2,200	2,000	0.50	1,000
		1.0	EV = 9200		1.00	EV = 4400

Analysis: The expected monetary value of Project M is greater than Project N. Therefore, Project Mhas a higher preference for acceptance.

5. The Managing Director of Y Ltd. has evolved some decision making to the operating division of the firm. He is anxious to extend this process but first wishes to be assured that decisions are being taken properly in accordance with group policy.

As a check on existing practice, he has asked for an investigation to be made into a recent decision to increase the price of the sole product of Z division to ₹ 14.50 per unit but to rising costs.

The following information and estimates were available for the management of Z division:

Last year 75,000 units were sold at ₹ 12 each with total units cost of ₹ 9 of which ₹ 6 were variablecosts.

For the year ahead the following cost and demand estimates have been made:

Pessimistic	**Probability 0.15**	**₹ 7.00 per unit**
Most likely	**Probability 0.65**	**₹ 6.50 per unit**
Optimistic	**Probability 0.20**	**₹ 6.20 per unit**

Total fixed costs:

Pessimistic **Most likely** **Optimistic**	**Probability 0.3** **Probability 0.5** **Probability 0.2**	**Increase by 50%** **Increase by 25%** **Increase by 10%**	
Demand estimates at various prices	**(units)**		**(Price per unit)**
Particulars	**Probability**	**₹ 13.50**	**₹ 14.50**
Pessimistic **Most likely** **Optimistic**	**0.3** **0.5** **0.2**	**45,000** **60,000** **70,000**	**35,000** **55,000** **68,000**

(Unit variable costs, fixed costs and demand estimates are statistically independent)

For this type of decision the group has decided that the option should be chosen which has the highest expected outcome with at least an 80% chance of breaking even.

You are required:

(a) to assess whether the decision was made in accordance with group guidelines,

(b) to obtain what is the group attitude to risk as evidenced by the guidelines.

Answer:

Demand	Probability	Contribution per unit	Probability	Total contribution	Joint Probability	Cumulative joint Probability
Selling Price ₹ 13.50						
45,000	0.3	6.50	0.15	2,92,500	0.045	0.045
		7.00	0.65	3,15,000	0.195	0.240
		7.30	0.20	3,28,500	0.060	0.300
60,000	0.5	6.50	0.15	3,90,000	0.075	0.375
		7.00	0.65	4,20,000	0.325	0.700
		7.30	0.20	4,38,000	0.100	0.800
70,000	0.2	6.50	0.15	4,55,000	0.030	0.830
		7.00	0.65	4,90,000	0.130	0.960
		7.30	0.20	5,11,000	0.040	1.000

Selling Price ₹ 14.50						
35,000	0.3	7.50	0.15	2,62,500	0.045	0.045
		8.00	0.65	2,80,000	0.195	0.240
		8.30	0.20	2,90,500	0.060	0.300
55,000	0.5	7.50	0.15	4,12,500	0.075	0.375
		8.00	0.65	4,40,000	0.325	0.700
		8.30	0.20	4,56,500	0.100	0.800
68,000	0.2	7.50	0.15	5,10,000	0.030	0.830
		8.00	0.65	5,44,000	0.130	0.960
		8.30	0.20	5,64,400	0.040	1.000

Last year's fixed costs = 75,000 units × ₹ 3 = ₹ 2,25,000

Estimated Fixed Costs	(₹)
₹ 2,25,000 × 1.10 × 0.2	49,500
₹ 2,25,000 × 1.25 × 0.5	1,40,625
₹ 2,25,000 × 1.50 × 0.3	1,01,250
	2,91,375

To break-even the contribution must be greater than ₹291375. It is noticed from the above tables iat at selling price of ₹13.50 there is 100% chance to break-even. However, at selling price of ₹14.50 there is 70% (0.075 + 0.325 + 0.1 + 0.03 + 0.13 + 0.04) chance of break-even. The selling price of ₹ 14.50, therefore, contravenes group guidelines.

Attitude to Risk - The group seeks to minimise the downside risk whilst maximising its return. It is to some extent risk averse, but it is prepared to take some risk i.e., 20% risk of loss. It is always sought maximise its returns, ignoring the probability of failure, it would be risk neutral.

6. (a) A Ltd. has a choice between three projects X, Y and Z. The following information has been estimated:

Projects	**Profit (₹ '000)**		
	D_1	**D_2**	**D_3**
X	**190**	**50**	**15**
Y	**110**	**200**	**160**
Z	**150**	**140**	**110**

Probabilities are D_1 = 0.6, D_2 = 0.2, D_3 = 0.2

Which projects should be undertaken if decision is made by expected value approach?

(b) Calculate the expected value of perfect information?

Answer:

(a) Calculation of Expected Values

Particulars		Profit (₹ '000)	Probability	Profit *Probability
Project X	D_1	190	0.6	114
	D_2	50	0.2	10
	D_3	15	0.2	3
				EV = 127
Project Y	D_1	110	0.6	66
	D_2	200	0.2	40
	D_3	160	0.2	32
				EV = 138
Project Z	D_1	150	0.6	90
	D	140	0.2	28
	D_3	110	0.2	22
				EV = 140

Analysis: Project Z should be chosen because it has the highest EV of ₹140000.

(b) Perfect Information

In order to obtain perfect information about future states of demand from market researchers, a company has to pay for the information. The maximum value of this perfect information will be equal the EV with the information less the EV without information.

Demand	Choose	Profit (₹ '000)	Probability	EV (₹ '000)
D_1	X	190	0.6	114
D_2	Y	200	0.2	40
D_3	Y	160	0.2	32
EV with Perfect Information				186

So, EV of the Perfect Information = 186 - 140 = ₹46 i.e. ₹46,000

7. Pioneer Projects Ltd. is considering accepting one of two mutually exclusive projects X & Y. The cash flow and probabilities are estimated as under:

Project X		*Project Y*	
Probability	***Cash flow***	***Probability***	***Cash flow***
0.10	**12,000**	**0.10**	**8,000**
0.20	**14,000**	**0.25**	**12,000**
0.40	**16,000**	**0.30**	**16,000**
0.20	**18,000**	**0.25**	**20,000**
0.10	**20,000**	**0.10**	**24,000**

Advise Pioneer Projects Ltd.

Answer:

Calculation of Standard Deviation Project X

P	X	EV = P*X	(x-x) ('000)	$(x - *)^2$	$P (x - *)^2$
0.10	12,000	1,200	-4	16	1.6
0.20	14,000	2,800	-2	4	0.8
0.40	16,000	6,400	0	0	0
0.20	18,000	3,600	2	4	0.8
0.10	20,000	2,000	4	16	1.6
		= 16,000			Variance = 4.8

Standard Deviation (σ) $= \sqrt{4.8} = 2.19$

Coefficient of Variation $= \sigma/EV \times 100 = 2.19/16 \times 100 = 13.68\%$

Calculation of Standard Deviation Project Y

P	X	EV = P*X	(x-x) ('000)	$(x - \bar{x})^2$	$P (x - \bar{x})^2$
0.10	8,000	800	-8	64	6.4
0.25	12,000	3,000	-4	16	4.0
0.30	16,000	4,800	0	0	0
0.25	20,000	5,000	4	16	4.0
0.10	24,000	2,400	8	64	6.4
		$\bar{x}$ = 16,000			Variance = 20.8

Standard Deviation (σ) $= \sqrt{20.8} = 4.56$

Coefficient of Variation = σ/EV × 100 = 4.56/16 ×100 = 28.58%

Analysis - Project Y is more risky as it is more susceptible to wider degree of variation around the most likely outcome than Project X. Therefore, Project X should be preferred.

8. A company is trying to choose between two investment proposals A and B. Project A has a standard deviation of ₹ 6,500 while Project B has a standard deviation of ₹ 7,200. The finance manager wishes to know which investment to choose, given each of the following combinations of the expected values;

(i) Project A and Project B both have expected net present value of ₹ 15,000.

(ii) Project A has expected NPV of ₹ 18,000 while for Project B it is ₹ 22,000.

Answer:

(i) If Project A and Project B both have expected net present value of ₹ 15,000, the Finance Manager should select Project A since its Standard Deviation is lesser than that of Project B. The lesser Standard Deviation represents lesser risk.

(ii) If Project A has expected NPV of ₹ 18,000 while for Project B is ₹ 22,000, then selection of Project will be done with the help of Coefficient of Variation.

Coefficient of Variation = Standard Deviation/ Expected NPV

Project A = 6500/18000 = 0.361

Project B = 7200/22000 = 0.327

Analysis - Investment in Project B should be chosen, since its Coefficient of Variation is lower.

9. M Ltd. is attempting to decide whether or not to invest in a project that requires an initial outlay of ₹ 4 lakhs. The cash flows of the project are known to be madeup of two parts, one of which varies independently over time and the other one which display perfect positive correlation. The cash flows of the six year life of the project are:

(₹)

	Perfectly Correlated Components		Independent Component	
Year	Mean	Standard Deviation	Mean	Standard Deviation
1	40,000	4,400	42000	4000
2	50,000	4,500	50000	4400
3	48,000	3,000	50000	4800
4	48,000	3,200	50000	4000
5	55,000	4,000	52000	4000
6	60,000	4,000	52000	3600

(i) Find out the expected value of the NPV and its standard deviation, using a discount rate of 10%.

(ii) Also find the probability that the project will be successful, *i.e.* P (NPV > 0) and state the assumptions under which this probability can be determined.

Answer:

(a) Calculation of NPV

Year	Mean (Perfectly correlated component)	Mean (Independent component)	Expected Value	PV factor @ 10%	Present value
(1)	(2)	(3)	(4) = (2) + (3)	(5)	(6)=(4)X(5)
1	40,000	42,000	82,000	0.909	74,538
2	50,000	50,000	1,00,000	0.826	82,600
3	48,000	50,000	98,000	0.751	73,598
4	48,000	50,000	98,000	0.683	66,934
5	55,000	52,000	1,07,000	0.621	66,447
6	60,000	52,000	1,12,000	0.564	63,168
Less: Cash outflow					4,27,285
					4,00,000
Expected Net Present Value					27,285

Calculation of Standard Deviation for Perfectly Correlated Components

Year	Standard Deviation	PV factor @ 10%	Present Value
1	4,400	0.909	3,999.6
2	4,500	0.826	3,717.0
3	3,000	0.751	2,253.0
4	3,200	0.683	2185.6
5	4,000	0.621	2484.0
6	4,000	0.564	2256.0
			16895.2

Standard Deviation = $\sqrt{\text{Variance}}$ = $(16.895.2)^2$ = 285447783

Calculation of Variance for Independent Component

Year (1)	Standard Deviation (2)	PV Factor @ 10% (3)	Present Value (4) = (2)×(3)	(Present Value)^2 (5)
1	4,000	0.909	3,636.0	1,32,20,496
2	4,400	0.826	3,634.4	1,32,08,863
3	4,800	0.751	3,604.8	1,29,94,583
4	4,000	0.683	2,732.0	74,63,824
5	4,000	0.621	2,484.0	61,70,256
6	3,600	0.564	2,030.4	41,22,524
Variance = 5,71,80,546				

Variance of the Project

= Variance of Perfectly Correlated Components + Variance of Independent Components

= $(16,895.2)^2$ + ₹ 5,71,80,546 = 28,54,47,783 + 5,71,80,546

= ₹ 34,26,28,329

Standard Deviation (σ) = $\sqrt{342628329}$ = 18,510

(ii) P (NPV ≥ 0) = P $(z \geq \frac{0-27285}{18510})$ = P (z ≥ –1.47) = 0.5 + 0.4292 (from normal table) = 0.9292

Hence, the probability that the project will be successful is 92.92%. The assumption made under which this probability can be determined is that the cash flows follow normal distribution with mean (M) is 27,285 and standard deviation (a) is 18,510 as calculated above.

10. From the following project details calculate the sensitivity of the (a) Project cost, (b) Annual cashflow, and (c) Cost of capital. Which variable is the most sensitive?

Project cost ₹ 12,000 Annual cashflow ₹ 4,500

Life of the project 4 years Cost of capital 14%

The annuity factor at 14% for 4 years is 2.9137 and at 18% for 4 years is 2.6667.

Answer:

Particulars	₹
Annual cash inflow (4,500 × 2.9137)	13,112
Less: Project cost	12,000
Net present value	1,112

(i) Sensitivity for Project Cost

If the project cost is increased by ₹ 1112, the NPV of the project will become zero. Therefore, the sensitivity for project cost is = 1,112/12000 × 100 = 9.27%

(ii) Sensitivity for Annual Cash Inflow

If the present value of annual cash inflow is lower by ₹ 1112, the NPV of the project will become zero. Therefore, the sensitivity for annual cash flow is = 1112/13112 × 100 = 8.48%

(iii) Sensitivity for Cost of Capital

Let 'x' be the annuity factor which gives a zero NPV i.e. 'x' is the IRR

– 12,000 + 4,500x = 0

Or, 4,500x = 12,000

Or, x = 12,000/4,500 = 2.6667

Hence, x = 2.6667 and at 18% for 4 years, the annuity factor is 2.6667.

Sensitivity % = (18% -14%)/14% = 29%

Analysis: The cash inflow is more sensitive, since only 8.5% change in cash inflow will make the NPV of the project zero.

11. Determine the risk adjusted net present value of the following projects:

Particulars	A	B	C
Net cash outlay (Rs.)	1,00,000	1,20,000	2,10,000
Project life	5 years	5 years	5 years
Annual cash inflow (Rs.)	30,000	42,000	70,000
Coefficient of variation	0.4	0.8	1.2

The company selects the risk-adjusted rate of discount on the basis of the co-efficient of variation:

Coefficient of variation	Risk adjusted rate of discount	Present value factor 1 to 5years at risk adjustedrate of discount
0.0	10%	3.791
0.4	12%	3.605
0.8	14%	3.433
1.2	16%	3.274
1.6	18%	3.127
2.0	22%	2.864
More than 2.0	25%	2.689

Answer:

Statement Showing Computation of Risk Adjusted Net Present Value

Project		**A**	**B**	**C**
Net cash outlay	(i)	100000	120000	210000
Annual cash inflow	(ii)	30000	42000	70000
Present value factor 1 to 5 years at risk adjusted rate of discount	(iii)	3.605	3.433	3.274
Present value of cash inflow	(iv) = (ii)*(iii)	108150	144186	229180
Risk adjusted NPV	(v) = (iv) – (i)	8150	24186	19180

12. A company is considering the purchase of a new machine for ₹ 3,50,000. It feels quite confident that it can sell the goods produced by the machine so as to yield an annual cash surplus of ₹ 1,00,000. There is, however, some uncertainty as to the machine's working life. A recently published trade association survey shows that members of the association have between them owned 250 of these machines and have found the lives of the machines vary as under:

Number of years of machine life	**Number of machines having given life**
3	**20**
4	**50**
5	**100**
6	**70**
7	**10**
	250

Assuming a discount rate of *10%* the net present value for each different machine life is as follows:

Machine life (Years):	**34567**				
***NPV* (₹)**	**(1,01,000)**	**(33,000)**	**29,000**	**86,000**	**1,37,000**

You are required to advise whether the company should purchase a new machine or not.

Answer:

Statement Showing Expected NPV

Machine life (years)	NPV (₹)	Number of machines having given life	Probability		Expected NPV (₹)
3	(1,01,000)	20	20/250	= 0.08	(8,080)
4	(33,000)	50	50/250	= 0.20	(6,600)
5	29,000	100	100/250	= 0.40	11,600
6	86,000	70	70/250	= 0.28	24,080
7	1,37,000	10	10/250	= 0.04	5,480
				1.00	26,480

Analysis: The expected NPV is ₹ 26,480 positive. Hence, the company should take up the project.

13. Given the following information, find out which project is more risky - A or B.

State of market	Probability of occurrence	Actual cash flow (₹)	
		Project A	Project B
High	0.2	1,000	1,200
Normal	0.6	800	800
Low	0.2	600	400

Answer:

Expected Values of Cash flows ($\bar{x}$):

Project A = [(2 X 1,000) + (6 X 800) + (2 X 600)]/10 = 800

Project B = [(2 X 1,200) + (6 X 800) + (2 X 400)]/10 = 800

As the values are same, viability has to be measured by standard deviation as follows:

Project	p	x	$\bar{x}$	$x - \bar{x}$	$(x - \bar{x})^2$	$(x - \bar{x})^2$ *p
Project A	0.2	1,000	800	200	40,000	8,000
	0.6	800	800	0	0	0
	0.2	600	800	-200	40,000	8,000
						16,000
Project B	0.2	1,200	800	400	1,60,000	32,000
	0.6	800	800	0	0	0
	0.2	400	800	-400	1,60,000	32,000
						64,000

Standard deviation: Project A = $\sqrt{16,000}$ = 126.5, Project B = $\sqrt{64,000}$ = 253

Analysis: Project B is more variable and hence riskier.

Study Note – 3

LEASING DECISIONS

Learning Objective: ***After studying this chapter, the students will be able to:***

- ***Solve problems on investment decisions under 'Lease' or 'Buy' options.***

1. A factory needs an equipment for use. It has the option of outright purchase or leasing the equipment. Data are given below. Recommend the best option that the factory should choose.

Option 1

Purchase outright for a cost of ₹ 80 lakhs. It is to be entirely financed by a term loan @18%p.a. interest on outstanding payable on a yearly basis. The term loan to be repaid in eight equal instalments of ₹ 10 lakhs each, beginning from second year-end. The economic life of the equipment is assessed to be ten year. The equipment will be depreciated @ 10% p.a. on straight line basis, with insignificant salvage value at the end of the economic life? The estimated maintenance expenses would be as detailed below:

Year	1	2	3	4	5	6	7	8	9	10
MC*	4.00	4.40	4.88	5.47	6.18	7.05	8.11	9.41	11.01	13.00

(*) MC- Maintenance cost in Rs. lakhs.

Option 2

The equipment may be leased for a ten-year period. The maintenance of the equipment will be done by the lessor. The lessee has to pay ₹ 18 lakhs annual rental at the beginning of each year over the lease period.

***Note* - Assume that the lessee is in a tax bracket of 50% and average cost of capital of the lessee firm as 14% p.a.**

Answer:

Option I: Purchase (₹ lakhs)

Year	Loan repaid	Amount balance	Interest on balance	Maintenance Cost	Interest + Maintenance + Depreciation	Tax saved 50%	Outflow Interest + Maintenance	Total outflow *
1	-	80	14.40	4.0	26.40	13.20	5.20	5.20
2	10	70	14.40	4.40	26.80	13.40	5.40	15.40
3	10	60	12.60	4,88	25.48	12.74	4.74	14.74
4	10	50	10.80	5.47	24.27	12.13	4.14	14.14
5	10	40	9.00	6.18	23.18	11.59	3.59	13.59
6	10	30	7.20	7.05	22.25	22.25	11.13	13.13
7	10	20	5.40	8.11	21.51	10.76	2.76	12.76
8	10	10	3.60	9.41	21.01	10.50	2.50	12.50
9	10	0	1.80	11.01	20.81	10.41	2.41	12.41
10	-	-	-	13.00	21.00	10.50	2.50	2.50

*** Inclusive of Loan Repayment @ ₹ 10 Lakhs p.a**

Calculation of Present Value				(₹ lakhs)
Year	**Total cash outflow**	**DCF @ 14%**		**Present value**
1	5.20	0.877		4.56
2	15.40	0.769		11.84
3	14.74	0.675		9.95
4	14.14	0.592		8.37
5	13.59	0.519		7.05
6	13.13	0.465		6.11
7	12.76	0.400		5.10
8	12.50	0.351		4.39
9	12.41	0.308		3.82
10	2.50	0.270		0.67
Total present value of cash outflows				61.86

Option II : Lease (₹ lakhs)

Year	Lease rent	Lease rent after tax shield	DCF @ 14%	Present value
1	18	9	1.000	9.00
2	18	9	0.877	7.89
3	18	9	0.769	6.92
4	18	9	0.675	6.07
5	18	9	0.592	5.33
6	18	9	0.519	4.67
7	18	9	0.465	4.19
8	18	9	0.400	3.60
9	18	9	0.351	3.16
10	18	9	0.308	2.77
Total present value of cash outflows				53.60

Suggestion: The present value of net cash flows is lowest for lease option, hence it is suggested to take equipment on lease basis.

2. A firm has the choice of buying a piece of equipment at a cost of ₹ 1,00,000 with borrowed funds at a cost of 18% p.a. repayable in five annual instalments of ₹ 32,000, or to take on lease the same on an annual rental of ₹ 32,000. The firm is in the tax-bracket of 40%.

Assume:

(i) The salvage value of the equipment at the end of the period is zero.

(ii) The firm uses straight line depreciation.

Discounting factors are:

@ 9%	**0.917**	**0.842**	**0.772**	**0.708**	**0.650**
@ 11%	**0.901**	**0.812**	**0.731**	**0.659**	**0.593**
@ 18%	**0.847**	**0.718**	**0.609**	**0.516**	**0.437**

Which alternative do you recommend?

Answer:

Cost of Borrowed Funds:

I (l-T) = 18% (1 -0.40)

= 18% (0.60)

= 10.8% say 11%

Computation of Cost of Owning (₹)

Years	Annual payment	Interest	Amortization	Depreciation	Tax. savings	Cost of owning
1	32,000	18,000	14,000	20,000	15,200	16,800
2	32,000	15,480	16,520	20,000	14,192	17,808
3	32,000	12,506	19,494	20,000	13,002	18,998
4	32,000	8,997	23,003	20,000	11,599	20,401
5	31,840	4,857	26,983	20,000	9,943	21,897
Total	1,59,840	59,840	1,00,000	1,00,000	63,936	95,904

One or two sample computation may be helpful for better understanding this problem

Incremental cost of leasing over cost of owning (₹)

Years	Cost of Owning	Net lease Case	Advantage of owning	D. F. @ 11%	Present value of advantage
1	16,800	19,200	2,400	0,901	2,162
2	17,808	19,200	1,392	0.812	1,130
3	18,998	19,200	202	0.731	148
4	20,401	19,200	(1,201)	.0.659	(791)
5	21,897	19,200	(2,697)	0.593	(1,599)
Total	95,904	96,000	96		1,050

Suggestion: It is advantageous to purchase the asset on borrowed funds, as the present value of advantages is positive.

3. PQR. Ltd. is considering the possibility of purchasing a multipurpose machine which cost ₹ 10 lakhs. The machine has an expected life of 5 years. The machine generates ₹ 6 lakhs per year before depreciation and tax, and the management wishes to dispose the machine at the end of 5 years which will fetch ₹1 lakh. The depreciation allowable for the machine is 25% on written down value and the company's tax rate is 50%. The company approached a NBFC for a five year lease for financing the asset which quoted a rate of ₹ 28 per thousand per month. The company wants you to evaluate the proposal with purchase option. The cost of capital of the company is 12% and for lease option it wants you to consider a discount rate of 16%.

Answer:

Evaluation of Purchase Option (₹ lakhs)

Particulars	**0**	**1**	**2**	**3**	**4**	**5**
Initial outlay	(10)	-	-	-	-	-
Operating Profit		6.00	6.00	6.00	6.00	6.00
Less : Depreciation		2.50	1.88	1.40	1.06	0.79
Profit before tax		3.50	4.12	4.60	4.94	5.21
Less : Tax (a.[1] 50%		1.75	2.06	2.30	2.47	2.60
Profit after tax		1.75	2.06	2.30	2.47	2.61
Add : Depreciation		2.50	1.88	1.40	1.06	0.79
Salvage value of machine		-	-			1.00
Net cash Inflow		4.25	3.94	3.70	3.53	4.40
Present value factor @ 12%	1.00	0.893	0.797	0.712	0.636	0.567
Present values	(10)	3.80	3.14	2.63	2.25	2.49

Net present value of the purchase option is ₹ 431000

Evaluation of Lease Option (₹ lakhs)

Particulars	**1**	**2**	**3**	**4**	**5**
Operating profit	6.00	6.00	6.00	6.00	6.00
Less : Lease rent	3.36	3.36	3.36	3.36	3.36
Profit before tax	2.64	2.64	2.64	2.64	2.64
Tax @ 50%	1.32	1.32	1.32	1.32	1.32
Profit after tax	1.32	1.32	1.32	1.32	1.32
Discount factor @ 16%	0.862	0.743	0.641	0.552	0.476
Present values	1.14	0.98	0.85	0.73	0.63

The net present value of lease option is ₹ 4,33,000.

Suggestion: From the analysis of the above we can observe that NPV of lease option is more than that of purchase option. Hence, lease of machine is recommended.

4. XYZ Ltd. is considering a proposal to acquire an equipment costing ₹ 5,00,000. The expected effective life of the equipment is 5 years. The company has two options - either to acquire it by obtaining a loan of ₹ 5 lakhs at 12% interest p.a. or by lease. The following additional information is available:

(i) the principal amount of loan will be repaid in 5 equal yearly instalments.

(ii) the full cost of the equipment will be written off over a period of 5 years on straight line basis and it is to be assumed that such depreciation charge will be allowed for tax purpose.

(iii) the effective tax rate for the company is 40% and the after tax cost of capital is 10%.

(iv) the interest charge, repayment of principal and the lease rentals are to be paid on the last day of each year.

You are required to work out the amount of lease rental to be paid annually, which will match the loan option.

Answer:

Calculation of Interest under Loan Option and Depreciation (₹)

Year	Principal amount at beginning of year	Repayment at end of year	Principal at end of year	Interest for year @12%	Depreciation for year
1	5,00,000	1,00,000	4,00,000	60,000	1,00,000
2	4,00,000	1,00,000	3,00,000	48,000	1,00,000
3	3,00,000	1,00,000	2,00,000	36,000	1,00,000
4	2,00,000	1,00,000	1,00,000	24,000	1,00,000
5	1,00,000	1,00,000	Nil	12,000	1,00,000

Calculation of Present Value under Loan Option (₹)

Year	Repayment of principal	Interest on loan	Total (1)+(2)	Tax on depreciation	Tax on Interest	Total (a)+(b)	Net outflow (3)-(c)	Discount factor	NPV
	(1)	(2)	(3)	(a)	(b)	(c)			
1	1,00,000	60,000	1,60,000	40,000	24,000	64.000	96,000	0.909	87,264
2	1,00,000	48,000	1,48,000	40,000	19,200	59,200	88,800	0.826	73,349
3	1,00,000	36,000	1,36,000	40,000	14,400	54,400	81,600	0.751	61,282
4	1,00,000	24,000	1,24,000	40,000	9,600	49,600	74,400	0.683	50,815
5	1,00,000	12,000	1,12,000	40,000	4,800	44,800	67,200	0.621	41,731
Total present value of cash outflows								3.790	3,14,441

Annual cash outflow after-tax = ₹ 3,14,441/3.790 = ₹ 82,966

Annual lease rental which will be indifferent to loan option = ₹ 82,966/1 - 0.40 = ₹ 1,38,277

5. N Ltd. is a hire purchase and leasing company. It has been approached by a small business firm interested in acquiring a machine through leasing. The quoted price of the machine is ₹ 5,00,000. 10% sale tax is extra. The lease will be for a primary lease period of 5 years.

The finance company wants 8% post-tax return on the outlay. Its effective tax rate is 35%. The income tax rate of depreciation on the machine is 25% (WDV). Lease rents are payable in arrear at the end of each year.

Calculate the annual rent to be charged by N Ltd.

Answer:

Determination of Cash outflows	(₹)
Cost of machine inclusive of sale tax (10%)	5,50,000
Less: Tax saving on Depreciation (Tax shield Relief)	1,22,284
Present value of cash outflows for purchase	4,27,716

Computation of Tax Saving on Depreciation of the Machine

Year	Cost/WDV	Depreciation @25%	Tax @35%	PV factor @8%	P.V. of Dep. tax shield
1	5,50,000	1,37,500	48,125	0.926	44,564
2	4,12,500	1,03,125	36,094	0.857	30,933
3	3,09,375	77,344	27,070	0.794	21,494
4	2,32,031	58,008	20,303	0.735	14,923
5	1,74,023	43,506	15,227	0.681	10,370
				3.993	1,22,284

Calculation of Leasing Rent

Let, the required lease rent per year be 'x'

Post-tax rental income p.a. (1 - 0.35) x = 0.65x

P.V. of 5 year's post-tax rental income = 0.65x × 3.993 = 2.59545x

This sum should be equal to ₹ 4,27,716

2.59545x = 4,27,716

x = 4,27,716/2.59545 = 1,64,795

Hence, the annual rent to be charged by N Ltd. is ₹ 1,64,795.

6. S Ltd. is faced with a decision to purchase or acquire on lease a mini car. The cost of the mini car is ₹1,26,965. It has a life of 5 years. The mini car can be obtained on lease by paying equal lease rentals annually. The leasing company desires a return of 10% on the gross value of the asset. S Limited can also obtain 100% finance from its regular banking channel. The rate of interest will be 15% p.a. and the loan will be paid in five annual equal instalments, inclusive of interest. The effective tax rate of the company is 40%. For the purpose of taxation it is to be assumed that the asset will be written off over a period of 5 years on a straight line basis.

(a) Advise S Ltd. about the method of acquiring the car.

(b) What should be the annual lease rental to be charged by the leasing company to match the loan option?

For your exercise use the following discount factors:

Discount Rate	Year 1	Year 2	Year3	Year 4	Year 5
10%	0.91	0.83	0.75	0.68	0.62
15%	0.87	0.76	0.66	0.57	0.49
9%	0.92	0.84	0.77	0.71	0.65

Answer:

(a) Annual loan repayment = Loan amount/ Annuity factor of 15% = 126965/3.86 = ₹ 32,892

Note: Annuity factor is based on the assumption that loan instalment is repaid at the beginning of the year to be at par with lease rentals. Such annuity factor at 15% works out to be 3.86.

Computation of Interest in Debt Payments (₹)

Year	0	1	2	3	4
Opening balance of principal	1,26,965	94,073	75,292	53,694	28,856
Interest @ 15%	Nil	14,111	11,294	8,054	4,036*
Total	1,26,965	1,08,184	86,586	61,748	32,892
Repayment of instalment	32,892	32,892	32,892	32,892	32,892
Closing balance	94,073	75,292	53,694	28,856	Nil

*Difference between the instalment amount and opening balance of 4th year.

Schedule of Cash Outflows in Debt Financing (₹)

End of	Loan re-payment	Interest @15%	Depreciation	Tax. shield [(2) + (3) × 0.40]	Net cash outflows - (4)	PV factor @ 9%	P.V. of cash outflows
	(1)	(2)	(3)	(4)	(5)	(6)	(7)
0	32,892	-	-	-	32,892	1.00	32.892
1	32,892	14,111	25,393	15,802	17,090	0.92	15,723
2	32,892	11,294	25,393	14,675	18,217	0.84	15,302
3	32,892	8,054	25.393	13,379	19,513	0.77	15,025
4	32,892	4,036	25,393	11,772	21,120	0.71	14,995
5		-	25,393	10,157	(10,157)	0.65	(6,602)
Total present valueof cash outflows							87,335

Annual lease rental = Cost of the asset/Annuity factor of 10%= 126965/4.17 = ₹ 30447

Schedule of cash outflows - Leasing Alternative (₹)

End of the year	Lease payment	Tax shield	After tax cash outflows	PV factors at 9%	Present value of cash outflows
0	30,447	-	30,447	1.00	30,447
1-4	30,447	12,179	18,268	3.24	59,188
5		12,179	(12,179)	0.65	(7,916)
Total present value of cash outflows					₹ 81,719

Decision - The present value of cash outflows under lease financing is ₹ 81,719 while that of debt financing (i.e., owning the asset) is ₹ 87,335. Thus leasing has an advantage over ownership in this case.

(b) Let the Annual Lease Rentals be '*x*'

Therefore the after tax cost of lease rentals will be 0.60 *x*

Present value will be 0.60 *x* × 4.17 = 2.502 *x*

Equating 2.502 *x* = ₹ 87,335

The value of *x* is obtained at ₹ 34,906.

Therefore, the lease rental should be ₹ 34,906 to match the loan option.

7. XYZ Ltd. is considering a proposal to acquire a machine costing ₹ 1,10,000 payable ₹ 10,000 down and balance payable in 10 annual equal instalments at the end of each year inclusive of interest chargeable at 15%. Another option before it is to acquire the asset on a lease rental of ₹ 15,000 per annun payable at the end of each year for 10 years. The following information is also available :

(i) Terminal scrap value of ₹ 20,000 is realisable, if the asset is purchased.

(ii) The company provides 10% depreciation on straight line method on the original cost.

(iii) Income-tax rate is 50%.

You are required to compute and analyse cash flows and to advise as to which option is better.

Answer:

Option I - Acquire the Machine by Purchase

Particulars	(₹)
Machine cost Less: Down payment	1,10,000 10,000
Balance payable in 10 equal annual installments	1,00,000

The annual instalments are payable at the end of each year inclusive of interest chargeable at 15%.

Annual repayment = ₹ 1,00,000/5.0188 = ₹ 19,925

Computation of Cashflows under Purchase Option (₹)

Year	Instalment	Interest	Principal amount repaid	Balance amount
1	19,925	15,000	4,925	95,075
2	19,925	14,261	5,664	89,411
3	19,925	13,412	6,513	82,898
4	19,925	12,435	7,490	75,408
5	19,925	11,311	8,614	66,794
6	19,925	10,019	9,906	56,888
7	19,925	8,533	11,392	45,496
8	19,925	6,824	13,101	32,395
9	19,925	4,859	15,066	17,329
10	19,925	2,596*	17,329	---

Balance amount i.e. ₹ 19,925 - ₹ 17,329 = ₹ 2,596.

Calculation of Net Present Value of Cash outflows under Purchase Option

Year	Instalment	Interest	Depreciation	Tax shield @ 50% [(3)+(4)]* 50/100	Net cash flow (2) -(5)	P.V. factor	Present values
(1)	(2)	(3)	(4)	(5)	(6)	(7)	(8)
0	10,000	—	—	—	10,000	1.000	10,000
1	19,925	15,000	11,000	13,000	6,925	0.870	6,025
2	19,925	14,261	11,000	12,631	7,294	0.756	5,514
3	19,925	13,412	11,000	12,206	7,719	0.658	5,079
4	19,925	12,435	11,000	11,718	8,207	0.572	4,694
5	19,925	11,311	11,000	11,156	8,769	0.497	4,358
6	19,925	10,019	11,000	10,510	9,415	0.432	4,067
7	19,925	8,533	11,000	9,767	10,158	0.376	3,819
8	19,925	6,824	11,000	8,912	11,013	0.327	3,601
9	19,925	4,859	11,000	7,930	11,995	0.284	3,407
10	19,925	2,596	11,000	6,798	13,127	0.247	3,242
							53,806
Less: P.V. of salvage value (after tax) (10,000 × 0.247)							2,470
Net present value of cash outflows							51,336

Option II - Acquire the Machine on Lease

Lease rent payable at the end of each year for 10 years = ₹ 15,000 p.a.

Net cash outflow p.a. on lease rentals after taking into consideration tax savings = ₹ 7,500 p.a.

N.P.V. of cash outflow for 10 years @ 15% = ₹ 7,500X5.0188 = ₹ 37,641

Suggestion - The present value of cash outflows is less in case of lease option. Hence, it is suggested to acquire the machine on lease basis.

8. ABC Limited has decided to go in for a new model of Mercedes Car. The cost of the vehicle is ₹ 40 lakhs. The company has two alternatives: (i) taking the car on finance lease, or (ii) borrowing and purchasing the car.

PQR Limited is willing to provide the car on finance lease to ABC Limited for five years at an annual rental of ₹ 8.75 lakhs, payable at the end of the year.

The vehicle is expected to have useful life of 5 years, and it will fetch a net salvage value ₹ 10 lakhs at the end of year five. The depreciation rate for tax purpose is 40% on written-down value basis. The applicable tax rate for the company is 35%. The applicable before tax borrowing rate for the company is 13.8462%.

What is the net advantage of leasing for the ABC Limited?

The values of present value interest factor at different rates of discount are as under:

Rate of Discount	1	2	3	4	5
0.138462	0.8784	0.7715	0.6777	0.5953	0.5229
0.09	0.9174	0.8417	0.7722	0.7084	0.6499

Answer:

Calculation of NPV if car is acquired on Finance Lease

Year	Lease rentals	Tax shield gained on lease rental @ 35%	Tax, shield lost on depreciation	Net cash outflow	Discount factor @ 9%	P.V.of cash. outflows
	(a)	(b)	(c)	(a) - (b) + (c)		
1	8,75,000	3,06,250	5,60,000	11,28,750	0.9174	10,35,515
2	8,75,000	3,06,250	3,36,000	9,04,750	0.8417	7,61,528
3	8,75,000	3,06,250	2,01,600	7,70,350	0.7722	5,94,864
4	8,75,000	3,06,250	1,20,960	6,89,710	0.7084	4,88,591
5	8,75,000	3,06,250	72,576	6,41,326	0.6499	4,16,798
5	Loss of salvage value			10,00,000	0.6499	6,49,900
Net Present Value of Cash Outflows						39,47,196

Calculation of Depreciation on WDV Basis

Year	1	2	3	4	5
WDV at the beginning of the year	40,00,000	24,00,000	14,40,000	8,64,000	5,18,400
Depreciation @ 40% WDV	16,00,000	9,60,000	5,76,000	3,45,600	2,07,360
WDV at the end of year	24,00,000	14,40,000	8,64,000	5,18,400	3,11,040
Tax shield on depreciation @ 35%	5,60,000	3,36,000	2,01,600	1,20,960	72,576

Net Benefit of Leasing = ₹ 40,00,000 - ₹ 39,47,196 = ₹ 52,804

Suggestion - Since the NPV of leasing is lower than the cost of purchase, it is suggested to acquire the car on finance lease basis.

Study Note – 4

INSTITUTIONS IN FINANCE MARKETS

Learning Objective: ***After studying this chapter, the students will be able to:***

- ***Understand structure of financial markets and different institutions operating in India.***

1. What are the basic elements of a well-functioning Financial System?

Answer:

The basic elements of a well-functional Financial System are:

(i) a strong legal and regulatory environment;

(ii) stable money;

(iii) sound public finances and public debt management;

(iv) a central bank;

(v) a sound banking system;

(vi) an information system; and

(vii) well functioning securities market.

2. Briefly discuss the important functions of a Financial System.

Answer:

The following are the functions of a Financial System:

(i) **Mobilise and allocate savings:** The financial system links the savers and investors to mobilise and allocate the savings efficiently and effectively.

(ii) **Monitor corporate performance:** The operators of the financial system not only select the projects that are to be funded but also monitor the performance of the investment carefully.

(iii) **Provide payment and settlement systems:** The financial system provides adequate payment and settlement system to its investors for exchange of goods and services and transfer of economic resources through time and across geographic regions and industries. The depositories and clearing houses are in charge of the clearing and settlement mechanism of the stock markets.

(iv) **Optimum allocation of risk-bearing and reduction:** The financial system provides various option of risk-reduction to its investors such as diversified portfolios and also by framing rules governing the operation of the system.

(v) **Disseminate price-related information:** The financial system helps in disseminating the price related information so that the investors can take well informed decisions regarding the investment, disinvestment, reinvestment or holding of any particular asset.

(vi) **Offer portfolio adjustment facility**–The financial system also provides portfolio adjustment facility by providing the options of buying and selling a wide variety of financial assets in a quick, cheap and reliable way.

(vii) **Lower the cost of transactions:** The transactions done with in the financial system are smooth, effective and have lower costs.

(viii) **Promote the process of financial deepening and broadening** –Financial deepening refers to an increase of financial assets as a percentage of GDP. Financial depth is an important measure of financial system development as it measures the size of the financial intermediary sector. Financial broadening refers to building an increasing number of varieties of participants and instruments. The financial system thus promotes the process of financial deepening and broadening.

3. What are the tools and techniques used by RBI to maintain financial stability?

Answer:

The following tools and techniques used by RBI to maintain financial stability:

(i) **Financial Stress Indicator:** It is a contemporaneous indicator of conditions in financial markets and in the banking sector.

(ii) **Systemic Liquidity Indicator:** This is used for assessing stresses in availability of systemic liquidity.

(iii) **Fiscal Stress Indicator:** This indicator used for assessing buildup of risks from the fiscal.

(iv) **Network Model:** This model used for the bilateral exposures in the financial system for assessing the inter-connectedness in the system.

(v) **Banking Stability Indicator:** This indicator issued for assessing risk factors having a bearing on the stability of the banking sector.

(vi) A series of **Banking Stability Measures** for assessing the systemic importance of individual banks.

4. What are the direct instruments used by the RBI to formulate and implement monetary policy?

Answer:

There are several direct instruments that are used in the formulation and implementation of monetary policy. These are as follows:

(i) **Cash Reserve Ratio (CRR):** The share of net demand and time liabilities that banks must maintain as cash balance with the Reserve Bank. The Reserve Bank requires banks to maintain a certain amount of cash in reserve as percentage of their deposits to ensure that banks have sufficient cash to cover customer withdrawals. The adjustment of this ratio, is done as an instrument of monetary policy, depending on prevailing conditions. Our centralized and computerized system allows for efficient and accurate monitoring of the balances maintained by banks with the Reserve Bank of India.

(ii) **Statutory Liquidity Ratio (SLR):** The share of net demand and time liabilities that banks must maintain in safe and liquid assets, such as government securities, cash and gold.

(iii) **Refinance Facilities:** Sector-specific refinance facilities (e.g., against lending to export sector) provided to banks exchange or other commercial papers. It also signals the medium-term stance of monetary policy.

5. Mention some of the important regulations relating to acceptance of deposits by NBFCs.

Answer:

Some of the important regulations relating to acceptance of deposits by NBFCs are as under:

(i) The NBFCs are all owed to accept/renew public deposits for a minimum period of 12 months and maximum period of 60 months. They cannot accept deposits repayable on demand.

(ii) NBFCs cannot offer interest rates higher than the ceiling rate prescribed by RBI from time to time. The Present ceiling is 12.5 percent per annum. The interest may be paid or compounded at rests not shorter than monthly rests.

(iii) NBFCs cannot offer gifts/incentives or any other additional benefit to the depositors.

(iv) NBFCs (except certain AFCs) should have minimum investment grade credit rating.

(v) The deposits with NBFCs are not insured.

(vi) The repayment of deposits by NBFCs is not guaranteed by RBI.

(vii) Certain mandatory disclosures are to be made about the company in the Application Form issued by the company soliciting deposits.

6. What are the differences between Banks and NBFCs?

Answer:

Banks and NBFCs are the financial institutions of a Financial System. NBFCs lend and make Investments and hence their activities are akin to that of banks; however there are a few differences as given below:

(i) NBFCs cannot accept demand deposits;

(ii) NBFCs do not form part of the payment and settlement system and cannot issue cheques drawn on itself;

(iii) Deposit insurance facility of Deposit Insurance and Credit Guarantee Corporation is not available depositors of NBFCs, unlike in case of banks.

Study Note – 5

INSTRUMENTS IN FINANCIAL MARKETS

Learning Objective: ***After studying this chapter, the students will be able to:***

- ***Understand different types of financial instruments in financial markets and calculate returns on mutual fund schemes.***

1. Choose the correct alternative:

(i) Mr. X earns 12 percent by investing in equity shares on his own. Now he is considering a recently announced equity based mutual fund scheme in which initial expenses 5 percent and annual recurring expenses are 1.5 percent. How much should the mutual fund earn to provide him a return of 10 percent?

(a) 11.04%

(b) 12.02%

(c) 12.63%

(d) 12.98%

(ii) A B C mutual fund had a net asset value of ₹ 10 at the beginning of a month, made income and capital gain distribution of ₹ 0.05 and ₹ 0.02 respectively per unit during the month. The fund ended the month with a net asset value of ₹ 10.08. The monthly rate of return of XYZ mutual fund is

(a) 1.5%

(b) 1.9%

(c) 2.0%

(d) 2.2%

(iii) The following information is extracted from ABC Mutual Fund Scheme:

Asset Value at the beginning of the month	**₹ 60**
Annualized return	**12%**
Distributions made in the nature of Income	**₹ 0.40 and ₹ 0.30**

And Capital gain (per unit respectively).

The month end net asset value of the mutual fund scheme is (limit your answers to two decimals)-

(a) ₹ 58.38

(b) ₹ 59.05

(c) ₹ 59.90

(d) ₹ 60.30

(iv) The following information is available to a mutual fund scheme:

Size of the scheme	₹ 150 Lakhs
Face value of the shares	₹ 100
Number of the outstanding shares	₹ 1.5 Lakhs
Market value of the fund's investments	₹ 220 Lakhs
Receivables	₹ 1 Lakhs
Liabilities	₹ 50,000

The NAV of the scheme is

(a) ₹ 145.00

(b) ₹ 145.90

(c) ₹ 146.60

(d) ₹ 147.00

(v) In case of an open ended Mutual Fund scheme the market price (ex-dividend) was ₹ 70. A dividend of ₹ 10 has just been paid and ex-divided price now is ₹ 82. The return has earned over the past year by the mutual fund is-

(a) 30.30%

(b) 30.90%

(c) 31.00%

(d) 31.43%

(vi) Money Plant mutual fund had a Net Asset Value (NAV) of ₹ 60 at the beginning of the year. During the year a sum of ₹ 6 was distributed as dividend besides ₹ 2 as capital gains distribution. At the end of the year NAV was ₹ 72.The total return for the year-

(a) 33.33%

(b) 33.95%

(c) 34.23%

(d) 34.78%

(vii) Suppose the aforesaid mutual fund [question(iv)] in the next year gives a dividend of ₹ 4 and no capital gains distribution and NAV at the end of second year is ₹ 66. So,the return for the second year would be-

(a) 15.96%

(b) 16.66%

(c) 16.98%

(d) 17.16%

(viii) Following information is available regarding a mutual fund:

Return	**13%**
Risk (S.D. i.e. σ)	**15%**
Beta (ß)	**0.90**
Risk Free Rate	**10%**

The Sharpe Ratio of the mutual fund is:

(a) 0.20

(b) 0.25

(c) 0.30

(d) 0.35

Answer:

Question	(i)	(ii)	(iii)	(iv)	(v)	(vi)	(vii)	(viii)
Answer:	(b)	(a)	(c)	(d)	(d)	(a)	(b)	(a)

2. Mr. Sinha made an investment in a Mutual Fund when the Net Asset Value was ₹ 14.50. 90 Days later the Asset Value per unit of the fund becomes ₹ 14.25. Moreover, in the meantime, Mr. Sinha received a cash dividend of ₹ 0.60 and a Capital Gain distribution of ₹ 0.40. Compute the monthly return.

Answer:

Dividend received by Mr. Sinha	=	₹ 0.60
Capital Gain distribution received	=	₹ 0.40
Capital Appreciation	=	₹ (0.25) [Closing NAV 14.25 Less Opening NAV 14.50]
Return of Mr. Sinha	=	[Dividend + Capital Gain Distribution + Capital Appreciation] ÷ Opening NAV
	=	₹ [0.60 + 0.40 - 0.25] ÷ ₹ 14.50
	=	0.75 ÷ 14.50
	=	5.17 Percent
Annualized Return	=	Return × 365 ÷ Period
	=	5.17 × 365 ÷ 90
	=	20.97 Percent
Monthly Return	=	20.97 ÷ 12
	=	1.75 Percent

3. The following portfolio details of a mutual fund scheme are given below:

Stock	No. of shares	Price (₹)
P	4 Lakh	45
Q	6 Lakh	50
R	8 Lakh	25
S	12 Lakh	30

The scheme has accrued expenses towards portfolio managers of ₹ 6 Lakh. There are 80 lakh shares outstanding. Find out the NAV (Net Asset Value) per unit of the scheme.

Answer:

Portfolio of the Scheme

Stock	No. of shares	Price (₹)	Value (₹)
P	4 Lakh	45	180 Lakh
Q	6 Lakh	50	300 Lakh
R	8 Lakh	25	200 Lakh
S	12 Lakh	30	360 Lakh
Total			1040 Lakh

NAV per Unit = (Total Portfolio – Total Expenses)/No of Shares Outstanding

= (₹1040 Lakh - ₹6 Lakh)/80 Lakh = ₹12.925

4. Vibrant Mutual Fund company made an issue of 10,00,000 units of ₹10 each on 01.01.2018. No entry load was charged. It made the following investments:

Particulars	
50,000 Equity Shares of (Face Value ₹ 100) each @ ₹ 150	**₹ 75,00,000**
7% Government Securities	**₹ 10,00,000**
8% Debentures (Unlisted)	**₹ 5,00,000**
10% Debentures (Listed)	**₹ 6,00,000**
Total	**₹ 96,00,000**

During the year, dividends of ₹ 10,00,000 were received on equity shares. Besides, interest on all types of debt securities was received on due time. At the end of the year equity shares and 10% debentures are quoted at 200% and 90% respectively. Other investments are quoted at par.

Find out the Net Asset Value (NAV) per unit given that the operating expenses during the year amounted to ₹ 6,00,000. Also find out the NAV, if the Mutual Fund had distributed a dividend of ₹ 1 per unit during the year to the unit holders.

Answer:

Given the Total initial investments is ₹ 96,00,000, out of issue proceeds of ₹ 1,00,00,000. Therefore, the balance of ₹ 4,00,000 is considered as issue expenses.

Particulars	Opening Value of Investments (₹)	Capital Appreciation (₹)	Closing Value of Investments (₹)	Income (₹)
Equity Shares	75,00,000	25,00,000	1,00,00,000	10,00,000
7% Government Securities	10,00,000	Nil	10,00,000	70,000
8% Debentures (Unlisted)	5,00,000	Nil	5,00,000	40,000
10% Debentures (Listed)	6,00,000	-60,000	5,40,000	60,000
Total	96,00,000	24,40,000	1,20,40,000	11,70,000
Less: Operating expenses during the period				(6,00,000)
Net income				5,70,000
Net fund balance = ₹ (1,20,40,000 + 5,70,000)				1,26,10,000
Less : Dividend ₹10,00,000 (10,00,000 unit @ ₹1 per unit)				10,00,000
Net fund balance after (dividend)				1,16,10,000
NAV (before calculating dividend) = ₹1,26,10,000/10,00,000				12.61
NAV (after calculating dividend) = ₹1,16,10,000/10,00,000				11.61

5. ABC Company Limited as the Asset Management Company (Commencing its functions from 1st May, 2017) under a trust deed with T.P Mutual Funds Limited managing solely equity schemes of 8 years (with effect from 1st June, 2017). Information relating to its expenses incurred during the year 2018-19 is as follows.

(₹ in Crores)

i. Custodian Charges	**0.59**
ii. Brokerage and Transaction Cost	**15.31**
iii. Agents Commission	**32.95**
iv. Audit Fees	**1.82**
v. Initial Issue Expenses	**112.5**

If accounts are intended to be closed on 31st March, 2019 and on that date the AMC is expected to hold Net Assets worth ₹ 1,500 crores (For operational year 2018-19).

What would be the eligible amount of expense chargeable by the AMC for its operations?

Answer:

From the given problem it is clear that ABC Company Limited as AMC is engaged in issuance of a close ended scheme (As the maturity period of the fund lies between 3 – 15 years). Expenses related to issue of units are to be amortized over the period of the scheme on weekly basis.

The total number of weeks within which the scheme remains effective is of (8 years × 12 months × 4 weeks) = 384 weeks. The financial year (i.e. 2018-19) comprise of (1 year × 12 months × 4 weeks) = 48 weeks.

Issue Expenses eligible for amortization in the year 2018-19 is of ₹ (48 × 112.5) / 384

= ₹ 14.0625 crores. (112.5 is expenses on weekly basis)

Maximum Limit of charging expenses for management by any AMC is 1.5% of the average weekly net assets held up to the ceiling of ₹ 100 crores (excluding amortized part of expenses on issue and redemption). For financial year 2018-19 assets held by the AMC is of ₹ 1,500 crores, therefore average weekly net assets held = ₹1,500 / 48 = ₹ 31.25 crores.

Maximum permissible expenses for management by ABC Company Ltd. is of ₹ (31.25 × 1.5%)

= ₹ 0.46875 crores.

Total threshold or simply total of maximum eligible expense for management = ₹ (14.0625 + 0.46875) crores = ₹14.53125 crores.

Table showing actual expenses claimed from AMC's part from T.P Mutual Funds Limited.

(₹ in Crores)

i. Custodian Charges	0.59
ii. Brokerage and Transaction Cost	15.31
iii. Agents Commission	32.95
iv. Audit Fees	1.82
v. Initial Issue Expenses	14.0625
vi. Total Expenses of Management	64.7325

Therefore eligible amount of expenses to be charged against management of scheme by ABC Company Limited is ₹ 14.53125 crores.

6. Goodluck Mutual Funds Limited registered in Mumbai issues equity oriented Mutual Fund Schemes mostly traded in BSE as well as in CSE. The trade being in operations found to cease on 8th February, 2018 in the respective exchanges.

Prices of the units as on the date are as follows:

Stock Exchange	Opening Price (₹)	High (₹)	Low (₹)	Closing Price (₹)
BSE	110.25	111.25	110.45	110.8
CSE	110.5	110.95	110.25	110.75

Additional Information:

- **Uncertain Mutual Funds Limited having a more or less similar portfolio of risk-return manages to offer a dividend yield of 5.46% at a payout ratio of 60% holding a Market Price of ₹ 110 per unit.**
- **Number of units issued by Goodluck Mutual Funds Limited are 1, 00,000 at an average cost of raising funds of 10%.**

Required:

a. What will be the value of the scheme as on 10th April, 2018?

b. Whether the value changes if valuation had been made on 9th April, 2018. - Explain

c. If values change what is the value of the scheme on 9th April, 2018?

Answer:

(a) Valuation of the Equity oriented Mutual Fund Scheme on 10th April, 2018

Units Last Traded: 8th February, 2018

Number of Days passed prior to valuation: 60

Since, 60 days have been passed since the last trade took place units are to be valued as a non-trade scrip.

A proxy needs to be identified for computing the value of the scheme. Here in the problem Uncertain Mutual Funds Limited having a market price of ₹ 110, and paying a dividend yield of 5.46% that means paying a dividend of ₹ 110 × 5.46% = ₹ 6 per unit best fits the place of proxy. If dividend of Rs. 6 is paid out at a Dividend Payout Ratio of 0.6, then Earnings per Unit is of ₹ 6 / 0.6 = ₹ 10.

Value of the Units on 10th April, 2018 of Goodluck Mutual Funds Limited will be ₹ 10 / 0.1 = ₹ 100 Value of the Mutual Fund Scheme: ₹ (100 × 1, 00,000 units) = ₹ 1, 00, 00,000

(b) The value of units changes if valuation is made on 9th April, 2018 (The previous day), As on 9th April, 2018, the time span of 60 days not expires and therefore we can use the closing price of the units as listed in its principal stock exchange for valuation purpose.

(c) Value of the scheme on 9th April, 2018: ₹ (110.8 × 1,00,000 units) = ₹ 1,10,80,000

7. PQ Limited contemplating to issue shares at ₹ 120 each (Face Value of ₹ 100 each) bearing floatation costs of 5% on the issue price.

Expected return on capital employed is 20%, with an anticipated payment of dividend per share of ₹ 11.40.

MX Mutual Funds Limited investing in the same industry manages to yield a return similar to the expectation of PQ Limited, bearing a floatation cost of 1.5% and management expenses (other than floatation costs) of 1.7% of yield.

Required:

(a) Expected Market Capitalization of PQ Limited at the end of 1st year.

(b) Investor's expectation on returns of MX Mutual Funds Limited.

Answer:

(a) Net sale proceeds from each share = ₹ 120 × (1 – 0.05) = ₹ 114

Return on Capital Employed = ₹ 114 × 20% = ₹ 22.80, out of which dividend payable ₹ 11.40 Cost of Equity Capital (Ke) = D1 / P0 = ₹ 11.40 / ₹ 120 = 9.5%

Expected Market Price per Equity Share at the end of 1st year = ₹ 22.80 / 9.5% = ₹ 240 Number of Equity shares to be issued = 1,00,000

Expected Market Capitalization of PQ Limited at the end of 1st year = ₹ 240 × 1,00,000 = ₹ 2,40,00,000

(b) Investor Expectation on Returns from units of MX Mutual Funds Limited will be as follows:

Returns from Mutual Funds = (Investors' Expectation / 100 – Issue Expenses) + Annual Recurring Expenses

If returns from MX Mutual Funds Limited becomes equal to the expectation of PQ Limited regarding their return on capital employed, since they both are in operations within the same sectors.

Then, Investors Expectation = {20% - (20% × 1.7%)} × (100 – 1.5) % = (19.66 × 0.985) = 19.3651%

8. Risk-Return Combinations relating to asset-mix of MFK and MFP are provided below.

	MFK			MFP		
Securities	**Expected Return**	**Total Risk**	**Investment**	**Expected Return**	**Total Risk**	**Investment (₹)**
Equity Shares						
Ambuja Cement	-	-	-	15%	14%	8,00,000
Tata Steel	12%	13%	1000000	-	-	-
Ashok Leyland	10%	15%	600000	-	-	-
Preferential Shares						
J.K Tyre	-	-	-	10%	8%	5,00,000
Debentures						
Essar Steel	-	-	-	9%	8%	7,00,000
ACC	8%	5%	400000	-	-	-

Correlation Matrix of companies

Company Name	Tata Steel	Ashok Leyland	AC C	Ambuja Cement	Essar Steel	J.K Tyre
Tata Steel	1	0.67	(0.4)	-	-	-
Ashok Leyland	0.67	1	(0.5)	-	-	-
ACC	(0.4)	(0.5)	1	-	-	-
Ambuja Cement	-	-	-	1	(0.8)	(0.6)
Essar Steel	-	-	-	(0.8)	1	0.7
J.K Tyre	-	-	-	(0.6)	0.7	1

Return on 91-day treasury bills is 7%. Based on above information, Compute:

(a) Expected Returns from units of MF^K and MF^P.

(b) Risk Association with the units of MF^K and MF^P.

(c) Advice where to commit funds and why?

(d) Calculate Sharpe Ratio and establish a platform of performance appraisal.

Answer:

(a) Expected Return from units of Mutual Fund E (R_{MF}) = $\sum w_i \times R_i$

Risk associated with returns of Mutual Funds (σ_{MF}) = $\sqrt{(w_I^2 \times \sigma_I^2) + (w_J^2 \times \sigma_J^2) + (w_L^2 \times \sigma_L^2) + 2 \times w_I \times w_J \times \sigma_I \times \sigma_J \times r(I,J) + 2 \times w_J \times w_L \times \sigma_J \times \sigma_L \times r(J,L) + 2 \times w_I \times w_L \times \sigma_I \times \sigma_L \times r(I,L)}$

Where, 'I', 'J', and 'L' are the securities with which the mutual fund institution has constructed its portfolio.

Calculation showing Expected Return from Mutual Fund Investments

Securities	Companies		MF^K			MF^P	
		Returns (Ri)	Weight (wi)	E (R_{MF})	Returns (Ri)	Weight (wi)	E (R_{MF})
Equity Share	Ambuja Cement	-	-	-	15%	0.40	6%
	Tata Steel	12%	0.5	6%	-	-	-
	Ashok Leyland	10%	0.3	3%	-	-	-
Pref. Share	J. K Tyre	-	-	-	10%	0.25	2.5%
Debentures	Essar Steel	-	-	-	9%	0.35	3.15%
	ACC	8%	0.2	1.6%	-	-	-

- $E(R_{MF})$ on MF_K = (6% + 3% + 1.6%) = 10.6%
- $E(R_{MF})$ on MF_P = (6% + 2.5% + 3.15%) = 11.65%

(b)

- Risk associated with returns of Mutual Funds 'K' (σ_{MF}) = $\sqrt{(w_T^2 \times \sigma_T^2) + (w_A^2 \times \sigma_A^2) + (w_{A'}^2 \times \sigma_{A'}^2) + \{2 \times w_T \times w_A \times \sigma_T \times \sigma_A \times r(T,A)\} + \{2 \times w_A \times w_{A'} \times \sigma_A \times \sigma_{A'} \times r(A,A')\} + \{2 \times w_T \times w_{A'} \times \sigma_T \times \sigma_{A'} \times r(T,A')\}}$

  Or, (σ_{MF}) = $\sqrt{(0.5^2 \times 13\%^2) + (0.3^2 \times 15\%^2) + (0.2^2 \times 5\%^2) + (2 \times 0.5 \times 0.3 \times 13\% \times 15\% \times 0.67) + (2 \times 0.3 \times 0.2 \times 15\% \times 5\% \times -0.5) + (2 \times 0.5 \times 0.2 \times 13\% \times 5\% \times -0.4)}$

  Or, (σ_{MF}) = 9.64%

- Risk associated with returns of Mutual Funds 'P' (σ_{MF}) = $\sqrt{(w_A^2 \times \sigma_A^2) + (w_E^2 \times \sigma_E^2) + (w_J^2 \times \sigma_J^2) + \{2 \times w_A \times w_E \times \sigma_A \times \sigma_E \times r(A,E)\} + \{2 \times w_E \times w_J \times \sigma_E \times \sigma_J \times r(E,J)\} + \{2 \times w_A \times w_J \times \sigma_A \times \sigma_J \times r(A,J)\}}$

  Or, (σ_{MF}) = $\sqrt{(0.4^2 \times 14\%^2) + (0.35^2 \times 8\%) + (0.25^2 \times 8\%) + (2 \times 0.4 \times 0.35 \times 14\% \times 8\% \times -0.8) + (2 \times 0.35 \times 0.25 \times 8\% \times 8\% \times 0.7) + (2 \times 0.4 \times 0.25 \times 14\% \times 8\% \times -0.6)}$ Or, (σ_{MF}) = 3.54%

(c) It is very much clear from the above computations that MF_P is providing higher returns (11.65%) on account of a lower risk association (3.54%) than that of provided by MF_K.

Therefore there is no reason to invest other than in MF_P.

(d) Sharpe Ratio: [{$E(R_{MF})$ - R_F} / σ_{MF}]

Parameters	**MF_K**	**MF_P**
Expected Return [$E(R_{MF})$]	10.6%	11.65%
Risk-free Rate of Return (R_F)	7%	7%
Risk Premium {$E(R_{MF}) - R_F$}	3.6%	4.65%
Std. Deviation of Returns (σ_{MF})	9.64%	3.54%
Sharpe Ratio	0.37	1.31
Rank	2ND	1ST

Result: The Sharpe ratio recommends investment in MF_P because it provides a higher risk premium for each unit of risk (Total Risk) association in comparison to MF_K.

9. The following information is available of Mutual Fund A, Mutual B and Market Portfolio for the past six months:

Fund/Month (Return %)	April 2017	May 2017	June 2017	July 2017	August 2017	September 2017
Fund A	3.00	1.75	(1.00)	3.50	1.50	0.00
Fund B	2.25	(1.25)	0.00	3.00	2.50	1.00
Market Portfolio	1.00	(0.75)	2.00	1.50	0.25	3.50

The 6 Month Treasury Bills carry an interest rate of 6% p.a. You are requested to evaluate performance of Funds A, B and Market Portfolio under Morning Star Index.

Answer:

Computation of Factors

Month	Fund A		Fund B		Market Portfolio	
	Return	Risk of Loss	Return	Risk of Loss	Return	Risk of Loss
(1)	(2)	(3)=(2)-0.50* (If (2)<0.50	(4)	(5)=(4)-0.50 (If (4)<0.50	(6)	(7)=(6)-0.50 (If (6)<0.50
April 2017	3.00	0.00	2.25	0.00	1.00	0.00
May 2017	1.75	0.00	(1.25)	1.75	(0.75)	1.25
June 2017	(1.00)	1.50	0.00	0.50	2.00	0.00
July 2017	3.50	0.00	3.00	0.00	1.50	0.00
August 2017	1.50	0.00	2.50	0.00	0.25	0.25
September 2017	0.00	0.50	1.00	0.00	3.50	0.00
Total	8.75	2.00	7.50	2.25	7.50	1.50
Average	8.75/6 = 1. 46	2.00/6 = 0.33	7.50/6 = 1. 25	0.38	7.50/6 = 1. 25	0.25

*Monthly Risk free return = 6%/12 = 0.50 p.m. Computation of Morning Star Index (MSI)

Particulars	Fund A (%)	Fund B (%)	Market Portfolio (%)
Average Monthly Return (I)	1.46	1.25	1.25
Average Monthly Risk of Loss (II)	0.33	0.38	0.25
Morning Star Index (MSI) (i.e. excess return) [(I)-(II)]	1.33	0.87	1.00
Ranking	1	2	3

Evaluation: Fund A has performed better than the market portfolio, while Fund B has not performed as good as the market portfolio despite having the equivalent average return during the period.

10. A Mutual Fund Scheme having 400,000 units has shown NAV of ₹ 9.25 and ₹ 9.95 at the beginning and at the end of the year respectively. The Scheme has given two options:

(a) Pay ₹ 0.85 per unit as dividend and ₹ 0.70 per unit as capital gain, or

(b) These distributions are to be reinvested at an average NAV of ₹ 9.15 per unit.

You are required to find out what difference it would make in terms of return available and which option is preferable?

Answer:

Particulars	Value (₹)
Opening NAV	9.25
Closing NAV	9.95
Dividend	0.85
Capital Gain Appreciation [Closing NAV-Opening NAV]	0.70
Capital Gain Distribution	0.70
Price paid at the year beginning [400,000×09.25]	3,700,000

Option 1: Returns are distributed to the mutual fund holders Balance Sheet

Liabilities	₹	**Assets**	₹
NAV of Closing Date [₹9.95*400,000]	3,980,000	Fund Assets	4,600,000
Dividend Payable [₹0.85*400,000]	340,000		
Capital Gain Distribution [₹0.70*400,000]	280,000		
	4,600,000		4,600,000

Returns = [Closing NAV - Opening NAV]/Opening NAV

= [4,600,000-3,700,000]/3,700,000 = 24.324%

Option 2: The distributions are reinvested at an average NAV of ₹ 9.15 Distributions reinvested

Particulars	**Value (₹)**
Capital Gain [0.70×400,000]	280,000
Dividend [0.85×400,000]	340,000
Total distributions	620,000
No of Units [Total distributions/Average NAV PU] 620,000/9.15=67759.56 units	67759.56 units

Balance Sheet

Liabilities	₹	Assets	₹
NAV of Closing Date			4,600,000
- 400,000 units	3,980,000	Fund Assets	
- 67759.56 units	620,000		
	4,600,000		**4,600,000**

Returns = [Closing NAV-Opening NAV]/Opening NAV

= [4,600,000 - 3,700,000]/3,700,000 = 24.324%

Comment: Holding period return is the same from investor's view point irrespective of whether the return is reinvested or distributed in the form of capital gains or dividends.

Study Note – 6

CAPITAL MARKETS

Learning Objective: ***After studying this chapter, the students will be able to:***

- ***Understand money market, capital market and its instruments.***

1. Write a note on buy-back of shares by companies.

Answer:

The process of buy-back of shares was not permitted in India till 1988, which became permissible after changes being done in the Companies Act 1956. Government of India and SEBI has issued certain guidelines which are to be followed at the time of buy-back of shares. Buy back of shares is a corporate financial strategy in which the shares of the company are bought by the company itself. Reliance, Bajaj, and Ashok Leyland etc. are the few companies in India which have opted for buy-back of shares. There are generally two methods that are applied in the corporate sector while buying-back of shares i.e. the tender method or the open market purchase method. The company, under the tender method, offers to buy back shares at a specific price during a specified period which is usually one month. Under the open market purchase method, a company buys shares from the secondary market over a period of one year subject to a maximum price fixed by the management. The open market purchase method is mostly preferred by the companies due to the advantage of time and price flexibility.

The buy-back method has a huge impact on the P/E ratio of the company. The P/E ratio may rise if investors view buyback positively or it may fall if the investors regard buyback negatively.

The advantages of Buy-back of shares are as follows:

(i) Efficient allocation of resources.

(ii) Ensuring price stability in share prices.

(iii) Tax advantages.

(iv) Exercising control over the company.

(v) Saving from hostile takeover.

(vi) Capital appreciation to investors which may otherwise be not available.

However, the share prices can also be manipulated by the promoters, speculators or collusive-traders through the buy-back of shares, which can be counted as a disadvantage of this process.

2. Write a short note on depository participant.

Answer:

The securities such as shares, debentures, bonds, Government Securities, MF units etc. are now kept in electronic form instead of physical form through the process of dematerialization. This speeds up the process of sale, purchase and transmission of securities. The services of dematerialization, re-materialization, transfer, sale etc. are provided by depositories registered under SEBI. The Depository Participant, thus, is an agent of the depository which acts as an intermediary between the depository and the investors. The investors can avail the depository related services by opening a Depository account, also known as Demat a/c, with any of the Depository Participants. The shares and securities are converted into electronic form and separate numbers are allotted to them. All the corporate benefits like bonus, stock splits, dividend etc are also managed by the depositories and its agent i.e. Depository Participants.

3. What are the Advantages of a depository system?

Answer:

There are various advantages of the depository system to different stakeholders which are as follows:-

(I) For the Capital Market:

(i) It reduces risk of bad delivery;

(ii) It eliminates voluminous paper work and the time and money related with it;

(iii) It is time saving as it reduces settlement time and ensures quick settlement;

(iv) There is no odd lot problem of shares when the shares are kept with the depositories;

(v) It facilitates stock-lending and thus deepens the market.

(II) For the Investor:

(i) It reduces the risks associated with the loss or theft of documents and securities and eliminates forgery;

(ii) It ensures liquidity as the process is automated and by speedy settlement of shares;

(iii) The depository holds the shares in electronic form so the investors are free from the physical holding of shares;

(iv) It reduces costs such as stamp duty, transaction cost and brokerage; and

(v) It assists investors in securing loans against the securities.

(III) For the Corporate Sector or Issuers of Securities:

(i) It provides updated information of the shareholders and investors like names and addresses, etc.;

(ii) It builds up and enhances the image of the company;

(iii) It reduces the costs of the secretarial department;

(iv) It increases the efficiency of registrars and transfer agents; and

(v) It provides better facilities of communication with members.

4. What are the advantages of Optionally Convertible Debentures (OCDs)?

Answer:

Optionally Convertible Debentures (OCDs) are the debentures that include the option to get converted into equity. The investor has the option to either convert these debentures into shares at price decided by the issuer/agreed upon at the time of issue.

Advantages of OCD are:

(a) From Issuer

(i) **Quasi-Equity:** Dependence of Financial Institutions is reduced because of the inherent option for conversion (i.e. since these are converted into equity, they need not be repaid in the near future.)

(ii) **High Equity Line:** It is possible to maintain Equity Price at a high level, by issuing odd-lot shares consequent to conversion of the debentures, and hence lower floating stocks.

(iii) **Dispensing Ownership:** Optionally Convertible Debentures enable to achieve wide dispersal of equity ownership in small lots pursuant to conversion.

(iv) **Marketability:** The marketability of the issue will become significantly easier, and issue expenses can be expected to come down with the amounts raised becoming more.

(b) Investor

(i) **Assured Interest:** Investor gets assured interest during gestation periods of the project, and starts receiving dividends once the project is functional and they choose to convert their debentures. Thereby, it brings down the effective gestation period at the investor's end to zero.

(ii) **Secured Investment:** The investment is secured against the assets of the Company, as against Company deposits which are unsecured.

(iii) **Capital Gains:** There is a possibility of Capital Gains associated with conversion, which compensates for the lower interest rate on debentures.

(b) Government

(i) Debentures helped in mobilizing significant resources from the public and help in spreading the Equity Investors, thereby reducing the pressure on Financial Institutions (which are managed by Government) for their resources.

(ii) By making suitable tax amendments, benefits are extended to promote these instruments, to safeguard the funds of Financial Institutions and encouraging more equity participation, which will also require a higher compliance under Corporate Laws, whereby organisations can be monitored more effectively.

5. Explain the concept of Net Asset Value (NAV) of a Mutual Fund Scheme.

Answer:

Net Asset Value (NAV) can be considered as the summation of the total asset value (net of expenses) per unit of the fund calculated by the Asset Management Company (AMC) at the end of every business day. The realizable value that an investor holding the fund might get on the day the scheme is liquidated can be reflected as the Net Asset Value for each unit of the scheme on that particular date. It can be deduced to the statement that Net Asset Value (NAV) denotes the performance of a particular mutual fund scheme and the day of valuation of NAV is called the valuation day. The NAV can also be defined as the value of joining a particular mutual fund scheme by the new investors. It is the value of net assets of the fund. The subscription made by the investors is noted as the capital in the balance sheet of the fund, and their investments are treated as assets. The NAV is calculated individually for every mutual fund scheme and the aggregate value of all other investment is taken as the portfolio's value.

The Net Asset Value (NAV) = Net Asset of the Mutual Fund Scheme/ Number of the Units Outstanding

Net Assets Value of a Mutual fund scheme is thus calculated as:

Market value of investments + Receivables + Accrued Income + Other Assets – Accrued

Expenses – Payables – Other Liabilities

The NAV will always be computed at market value since the investment of the mutual funds are always marked at market value only. The computation of NAV for traded and non-traded schemes of Mutual Fund are to be done as per the separate valuation norms specified by the Securities and Exchange Board of India (SEBI). The SEBI has also notified that the mutual funds are obligated to compute Net Asset Value (NAV) of each scheme and to disclose them on a regular basis – daily or weekly (depending on scheme's type) and publish them in atleast two daily newspapers, as per the Regulation 48 of SEBI (Mutual Funds) Regulations.

The computation of NAV plays an important part in the decision of an investors whether to enter or to exit a MF scheme. The NAV also helps the analyst in determination of the yield of the mutual fund schemes.

6. Explain briefly the features of the Money market in India.

Answer:

Features of Indian Money Market are as follows:

(a) Instruments that are traded: Money market is a collection of instruments like Certificate of Deposits , Inter-Bank Participation Certificates, Commercial Bills, Treasury Bills, Call money, Notice money, Repos, Term money, Commercial Papers, Inter Corporate Deposits, Swaps, etc.

(b) Large number of Participants: The main participants of Money market are — (i) Large lenders, (ii) Mutual funds companies and investors, (iii) Financial institutions such as the RBI, Scheduled commercial Banks, Discount and Finance House of India and (iv) Large Borrowers. There exists a large network of such participants in the money market which ultimately adds to the increase in the depth of the market. This network can be generally categorised as follows:

Organized Sector:

1. Commercial banks and Other Banks
2. Co-operative Banks
3. Non-Banking Financial Companies

Unorganized Sector

1. Indigenous Bankers
2. Unorganized money lenders
3. Nidhis and chit funds

(c) Zone centric activities: Activities in the money market have a tendency to to concentrate in some centre serving as a region or an area. The width of such area varies due to its size and the needs and demands of the market.

(d) Pure competition: There exists a pure and healthy competition among the participants of the money market as they generally tend to be impersonal in character.

(e) Price Difference are low: The Price difference for similar type assets gets eradicated by the interplay between the demand and supply of the asset.

(f) Flexibility in Regulations: Certain degree of flexibility remains in the regulatory framework and continuous endeavours are undertaken for introduction of new instruments / innovative techniques in dealing and trading.

(g) Size of the Money market: The money market is considered a wholesale market as the size and volume of funds or financial assets that are traded in the market are very large amounting to crores of rupees.

Study Note – 7

COMMODITY EXCHANGE

Learning Objective: ***After studying this chapter, the students will be able to:***

- ***Understand commodity derivatives and commodity exchanges.***

1. Why are commodity derivatives important?

Answer:

Commodity derivatives play an important role in risk management. We know that prices of commodities, metals, shares and currencies fluctuate over time. The possibility of adverse price changes in future creates risk for businesses. Commodity derivatives are used to reduce or eliminate price risk arising from unforeseen price changes of commodities. Two important commodity derivatives are futures and options which are traded in commodity exchanges.

(i) Commodity Futures Contracts: A futures contract is an agreement for buying or selling a commodity for a predetermined delivery price at a specific future time. Futures are standardized contracts that are traded on organized futures exchanges that ensure performance of the contracts and thus remove the default risk.

(ii) Commodity Options contracts: Like futures, options are also financial instruments used for hedging and speculation. The commodity option holder has the right, but not the obligation, to buy (or sell) a specific quantity of a commodity at a specified price on or before a specified date.

2. Briefly discuss the basic characteristics of Commodity Exchange in India.

Answer:

The basic characteristics of commodity exchange in India are:

(i) The units are inter-changeable and no value adding processes are performed on them. This allows the units to be traded on exchanges without prior inspection.

(ii) Every commodity has a unique supply factor and as they are produced "naturally".

(iii) Commodities are subject to cycles in demand from both intermediate players and end users. High prices usually lead to a boost in resource investments causing excess supply in the future which eventually pushes down commodity prices.

(iv) The commodities from different groups may be negatively correlated at a point of time. For example, the prices of wheat and aluminum can move in the opposite direction as they are affected by a different set of factors.

(v) There is a positive correlation between commodity prices and growth measures, although there may be a significant lag between a pickup in industrial production and commodity prices.

(vi) A positive correlation is often seen between commodities and inflation indicators. In particular, commodities tend to react to an early stage of inflation as raw material price appreciation generally tends to precede, and quite often exceed consumer price inflation growth. While true over the very long term, the relationship between inflation and commodity prices has been considerably weaker over the last 10 years, which has been characterized by disinflation/low inflation.

The above characteristics may not be true for all commodities taken individually; however they are true for diversified indices of industrial commodities and agricultural commodities.

3. List four benefits of commodity futures markets.

Answer:

(i) **Price Discovery:** Based on inputs regarding specific market information, the demand and supply equilibrium, weather forecasts, expert views and comments, inflation rates, Government policies, market dynamics, hopes and fears, buyers and sellers conduct trading at futures exchanges. This transforms into continuous price discovery mechanism. The execution of trade between buyers and sellers leads to assessment of fair value of a particular commodity that is immediately disseminated on the trading terminal.

(ii) **Price Risk Management:** Hedging is the most common method of price risk management. It is strategy of offering price risk that is inherent in spot market by taking an equal but opposite position in the futures market. Futures markets are used as a mode by hedgers to protect their business from adverse price change. Hedging benefits who are involved in trading of commodities like farmers, processors, merchandisers, manufacturers, exporters, importers etc.

(iii) **Improved product quality:** The existence of warehouses for facilitating delivery with grading facilities along with other related benefits provides a very strong reason to upgrade and enhance the quality of the commodity to grade that is acceptable by the exchange. It ensures uniform standardization of commodity trade, including the terms of quality standard: the quality certificates that are issued by the exchange-certified warehouses have the potential to become the norm for physical trade.

(iv) **Import- Export competitiveness:** The exporters can hedge their price risk and improve their competitiveness by making use of futures market. A majority of traders which are involved in physical trade internationally intend to buy forwards. The purchases made from the physical market might expose them to the risk of price risk resulting to losses. The existence of futures market would allow the exporters to hedge their proposed purchase by temporarily substituting for actual purchase till the time is ripe to buy in physical market. In the absence of futures market it will be meticulous, time consuming and costly physical transactions.

4. Discuss the role of Forward Markets Commission.

Answer:

Forward Markets Commission provides regulatory oversight in order to ensure financial integrity (i.e. to prevent systematic risk of default by one major operator or group of operators), market integrity (i.e. to ensure that futures prices are truly aligned with the prospective demand and supply conditions) and to protect and promote interest of customers/ non-members. It prescribes the following regulatory measures:

(i) Limit on net open position as on the close of the trading hours. Sometimes limit is also imposed on intra-day net open position. The limit is imposed operator-wise and in some cases, also member- wise.

(ii) Circuit-filters or limit on price fluctuations to allow cooling of market in the event of abrupt upswing or downswing in prices.

(iii) Special margin deposit to be collected on outstanding purchases or sales when price moves up or down sharply above or below the previous day closing price. By making further purchases/sales relatively costly, the price rise or fall is sobered down. This measure is imposed only on the request of the exchange.

5. Write a short note on Commodity Exchange.

Answer:

A commodities exchange is an exchange where various commodities and derivatives products are traded. Most commodity markets across the world trade in agricultural products and other raw materials (like wheat, barley, sugar, maize, cotton, cocoa, coffee, milk products, pork bellies, oil, metals, etc.) and contracts based on them. These contracts can include spot, forwards, futures and options on futures. Other sophisticated products may include interest rates, environmental instruments, swaps, or ocean freight contracts.

Commodities exchanges usually trade futures contracts on commodities, such as trading contracts to receive something, say corn, in a certain month. A farmer raising corn can sell a future contract on his corn, which will not be harvested for several months, and guarantee the price he will be paid when he delivers; a breakfast cereal producer buys the contract now and guarantees the price will not go up when it is delivered. This protects the farmer from price drops and the buyer from price rises.

Speculators and investors also buy and sell the futures contracts in attempt to make a profit and provide liquidity to the system. However, due to the financial leverage provided to traders by the exchange, commodity futures traders face a substantial risk.

A commodity exchange provides the rules, procedures, and physical for commodity trading, oversees trading practices, and gathers and disseminates marketplace information. Commodity exchange transactions take place on the commodity exchange floor, in what is called a pit, and must be effected within certain time limits.

6. Write short notes on Long Hedge and Short Hedge in Commodity Future Market.

Answer:

Hedging strategy with futures revolves around compensating anticipated losses in the spot market with the equivalent gains in the futures market. This is done by taking a position on the futures market that is opposite to the position in the spot market.

Long Hedge: A long hedge is one that requires taking a long position in the futures. It issued by those who are short on the asset. For example, consider a petro chemical plant that needs to process 10,000 barrels of oil in three month time. To hedge against the rising price the plant needs to go long on the futures contract of crude oil. The spot price of crude oil is ₹1,950 per barrel, while futures contract expiring three months from now is selling for ₹2,200 per barrel. By going long on the futures the petro chemical plant can lock-in the procurement at ₹2,200 per barrel.

Short Hedge: A short hedge means a short position in futures. It is used by those who are long on the underlying asset. In order to hedge the long position on asset one would require taking short position in the futures market. For example, consider a sugar mill in Uttar Pradesh. It is expected to produce100MTof sugar in the month of April. The current price today (the month of February) is ₹22 per kg. April futures contract in sugar due on 20th April is trading at ₹25 per kg. The sugar mill apprehends that the price lesser than ₹25 per kg will prevail in April due to excessive supply then. To execute the hedging strategy the sugar mill has to take the opposite position in the futures market. The sugar mill is long on the asset in April. Therefore, it needs to sell the futures contract today. The number of contracts that needs to be sold is dependent upon the exposure in the physical asset and the value one needs to cover.

Study Note – 8

SECURITY ANALYSIS AND PORTFOLIO MANAGEMENT

Learning Objective: ***After studying this chapter, the students will be able to:***

- ***Understand the concept of systematic risk, security market line, etc.***
- ***Calculate expected Rate of Return from securities, Standard Deviation of returns, Systematic and unsystematic risk, re-purchase price of share, etc.***
- ***Recommend for investment from different alternatives and too manage the portfolio for investors.***

1. Choose the correct alternative:

(i) Consider the following information regarding of X Ltd. and Y Ltd.

Stock	Return	Variance	Weight of the Portfolio
X Ltd.	14%	441%	0.6
Y Ltd.	11%	256%	0.4

If the variance of the portfolio is 122, what is the coefficient of correlation between the stocks approximately?

(a) 0.45

(b) −0.48

(c) 0.56

(d) 0.67

(ii) An investor owns a stock portfolio consisting of four stocks. He invested in stock 20% in stock A; 25% in stock B; 30% in stock C and 25% in stock D. The betas of these four portfolios are :0.9; 1.3; 1.2 and 1.7 respectively. The beta of portfolio is-

(a) 1.12

(b) 1.29

(c) 1.45

(d) 1.76

(iii) Security Market Line (SML) shows the relationship between return on the stock and

(a) Return on the market portfolio

(b) Risk-free rate of return

(c) Beta of the stock

(d) Variance of the stock returns

(iv) Historically, when the market return changed by 10%, the return on the stock of A Ltd. changed by 16%. If the variance of the market return is 257.81, what would be the systematic risk for A Ltd.?

(a) 320%

(b) 480%

(c) 660%

(d) 720%

(v) The intercept of the Security Market Line (SML) is:

(a) $E(R_m) - R_f$

(b) $1/(E(R_m) - R_f)$

(c) $R_f - E(R_m)$

(d) R_f

(vi) Residual analysis is a test of

(a) Weak-form of market efficiency

(b) Semi-strong form of market efficiency

(c) Strong form of market efficiency

(d) Super-strong form of market efficiency

(vii) Securities A and B have a standard deviation of 10% and 15% respectively. The respective average returns are 12% and 20%. Investor X has limited funds. Which is safer security for investment?

(a) A is more secured.

(b) B is more secured.

(c) Both A & B are equally secured.

(d) Incomplete information.

(viii) Which of the following is on the horizontal axis of the Security Market Line?

(a) Beta

(b) Standard deviation

(c) Expected return

(d) Required return

(ix) The beta of stock of A Ltd. is 2.00 and is currently in equilibrium. The required rate of return on the stock is 12% and expected return on the stock is 10%. Suddenly, due to change in the economic conditions, the expected return on the market increases to 12%. Other things remaining the same, what would be new required rate of return on the stock?

(a) 15.0%

(b) 16.0%

(c) 20.0%

(d) 22.5%

(x) If you invest 60% of your money in B Ltd. and 40% in T Ltd.. Assume that the standard deviation of B Ltd. is 80% and standard deviation of T Ltd. is 30%. The correlation coefficient between B Ltd. and T Ltd. is 0.2. What is the standard deviation of the portfolio?

(a) 41.33%

(b) 49.50%

(c) 51.75%

(d) 54.34%

Answer:

Question	(i)	(ii)	(iii)	(iv)	(v)	(vi)	(vii)	(viii)	(ix)	(x)
Answer:	(b)	(b)	(c)	(c)	(d)	(b)	(b)	(a)	(b)	(c)

2. (a) Calculate the expected rate of return for each security from the figures below.

Security	A	B	C	D	E
β – values	1.3	1.6	1	1.5	0
Actual Return (R_p)	21	23.6	16	20	4.8
Investments (In ₹ Lacks.)	1.25	1.5	1.25	1.45	0.8

(b) Further if Mr. Anup Ahuja wants to form a portfolio with the above investible funds in respective securities what would be his expected return on such asset-mix?

The following data is available for three securities:

Security	A	B	C
Beta coefficient	1.4	1.5	1.6
Standard Deviation of Market Return	0.5	0.5	0.5
Total Risk	0.6	0.8	0.85

For which of these securities the systematic component explains the largest share of total risk?

Answer:

(a) Since Value of Beta (β) for security C is 1, the market rate of return is equal to the return as reflected by security C (i.e. 16%).

Similarly the risk free rate of return is equal to the return as provided by security E (i.e. 4.8%).

Therefore, Risk premium awarded by market is equal to (R_M-R_F), i.e. (16-4.8) % or, 11.2%.

Expected Rate of Return E (R_i) = $R_F + \beta_i (R_M - R_F)$

Security	A	B	C	D	E
Risk free Rate of Return (R_F)	4.8%	4.8%	4.8%	4.8%	4.8%
Beta Values (β_i)	1.3	1.6	1	1.5	0
Risk premium from Market (R_M - R_F)	11.2%	11.2%	11.2%	11.2%	11.2%
Effective Risk Premium [β_i (R_M - R_F)]	14.56%	17.92%	11.2%	16.8%	0%
Expected Rate of Return E (R_i)	19.36%	22.72%	16%	21.6%	4.8%

(b) Computation of Weighted Beta

Security	Investible Funds (In ₹)	Weightage of Invetment	Beta Values (β_i)	Weighted Beta
A	1,25,000	0.2	1.3	0.26
B	1,50,000	0.24	1.6	0.384
C	1,25,000	0.2	1	0.2
D	1,45,000	0.232	1.5	0.348
E	80,000	0.128	0	0
Total	6,25,000	1		1.192

In computation of the expected return from portfolio of the above securities weighted beta will be used as a proxy to evaluate effective risk premium.

Expected Rate of Return from portfolio E (R_p) = $R_F + \beta (R_M - R_F)$.

Where, β = Weighted Beta.

E (R_p) = 4.8% + 1.192 (11.2%) = 4.8% + 13.3504% = 18.15%.

Total Risk = Systematic Risk + Un-systematic Risk

Var. (R_{it}) = $\beta_i^2 \sigma_M^2$ + Var. (e_{it})

Table showing computation of Systematic and Un-systematic Risk

Securities	A	B	C
Beta Values (β)	1.4	1.5	1.6
Square of Beta Values (β^2)	1.96	2.25	2.56
Std. Deviation of Market Return (σ_M)	0.5	0.5	0.5
Variance of Market Return (σ_M^2)	0.25	0.25	0.25
Systematic Risk ($\beta_i^2 \sigma_M^2$)	0.49	0.5625	0.64
Total Risk [Var. (R_{it})]	0.6	0.8	0.85
Unsystematic Risk [Var. (e_{it})]	0.11	0.2375	0.21
Systematic Risk to Total Risk Ratio [($\beta_i^2 \sigma_M^2$)/ Var. (R_{it})]	0.8167	0.7031	0.7529

Therefore, among all the securities the largest share of systematic risk explained out of total risk is been followed in case of security A.

3. Mr. Abinash has invested his fund in two securities of the same company, details of which has been laid in the following section.

Security	Equity Share	Preference Share
Extent of Commitment	0.4	0.6
Expected Return	14%	11%
Volatility of Returns (Measured in terms of Sigma)	12%	15%
Covariance	120	

Compute:

(a) Expected Return from the Asset-mix.

(b) Risk associated with the portfolio.

(c) Minimum commitment of funds in securities to mitigate the exposure to risks at the given value of correlation coefficient.

Should the investor try to have a different combination of securities?

Answer:

(a) Expected Return from the Asset-Mix $[E(R_P)] = \sum w_i \times R_i$.

Where, 'i' runs from 1 to 'n', 'n' is the number of securities in the portfolio.

Expected Return from portfolio $[E(R_P)] = \{(0.4 \times 14\%) + (0.6 \times 11\%)\} = 12.2\%$.

(b) Measure of Portfolio Risk $(\sigma_P) = \sqrt{(w_E^2 \times \sigma_E^2) + (w_{P'}^2 \times \sigma_{P'}^2) + 2 \times w_E \times w_{P'} \times \sigma_E \times \sigma_{P'} \times r_{(E,P')}}$

Where, w_E = Investment in Equity Share, w_P = Investment in Preferential Share, σ_E = Volatility in Equity Returns, $\sigma_{P'}$ = Volatility in Preferential Returns, $r_{(E,P')}$ = Correlation Coefficient between Equity Share and Preferential Share.

Correlation Coefficient $(r_{(E,P')}) = Cov._{(E,P')} / \sigma_E \times \sigma_{P'} = 120 / (12 \times 15) = 0.67$

Portfolio Risk $(\sigma_P) = \sqrt{\{(0.4)^2 \times (12\%)^2\} + \{(0.6)^2 \times (15\%)^2\} + \{2 \times (0.4 \times 0.6) \times (12 \times 15 \times 0.67)\}} = 12.73\%$.

(c) Minimum Investment required to mitigate risks in Equity $(w_{E\,(Min.)})$ and in Preference Shares $(w_{P'\,(Min.)})$

$w_{E\,(Min.)} = [\sigma_{P'}^2 - \{\sigma_E \times \sigma_{P'} \times r_{(E,P')}\}] / [\sigma_E^2 + \sigma_{P'}^2 - (2 \times \sigma_E \times \sigma_{P'} \times r_{(E,P')})]$

$w_{E\,(Min.)} = (15\%)^2 - (12 \times 15 \times 0.67) / (12\%)^2 + (15\%)^2 - (2 \times 12 \times 15 \times 0.67) = 81.69\%$.

$w_{P'\,(Min.)} = (1 - w_{E\,(Min.)}) = (1 - 0.8169) = 18.31\%$.

Mr. Abinash is expected to invest his available funds in Equity Share @ 81.69% and in Preferential Share @ 18.31% to make his portfolio bearing with minimum risk. At present his portfolio bears a combination of 40% and 60% on equity and preferential share investments respectively, which is not the optimum one. Therefore he is advised to try a different combination of securities.

4. Return on asset mix of Sambhavana Limited and Bhavana Limited at different stages of economy with respective chances of taking place is provided in the following.

State of Economy	Chance of Occurrence	Sambhavana Ltd.	Bhavana Ltd.
Boom	0.1	20%	26%
Growth	0.5	15%	18%
Decline	0.3	10%	8%
Depression	0.1	5%	0%

You are required to compute the following.

(a) Expected Return of the companies mentioned above.

(b) Volatility in expected return of the companies expressed in terms of Standard Deviation.

(c) The co-movement and the degree of association between returns.

As an Investment Advisor in which of the above companies you would recommend to invest funds – Establish a ground supporting your recommendation.

Answer:

(a) Expected Return on Investment $[E(R_i)] = \sum p_i \times R_i$, where, 'i' runs from '1' to 'n'.

- Expected Return from Sambhavana Limited = {(20% × 0.1) + (15% × 0.5) + (10% × 0.3) + (5% × 0.1)} = 13%,
- Expected Return from Bhavana Limited = {(26% × 0.1) + (18% × 0.5) + (8% × 0.3) + (0% × 0.1)} = 14%.

(b) Volatility in expected return of the companies $(\sigma) = \sqrt{\sum p_i \times \{R_i - E(R_i)\}^2}$

Table showing computation of variation in securities of Sambhavana Limited

Probability (p_i)	$R_{S'}$	$E(R_i)$	$R_{S'} - E(R_i)$	$[R_{S'} - E(R_i)]^2$	$p_i \times \{R_{S'} - E(R_i)\}^2$
0.1	20%	13%	7%	49%	4.9%
0.5	15%	13%	2%	4%	2%
0.3	10%	13%	-3%	9%	2.7%
0.1	5%	13%	-8%	64%	6.4%

Return and Risk from securities of Sambhavana Limited is denoted as $R_{S'}$ and $\sigma_{S'}$ respectively.

$(\sigma_{S'}) = \sqrt{(4.9\% + 2\% + 2.7\% + 6.4\%)} = 4\%$

Table showing computation of variation in securities of Bhavana Limited

Probability (p_i)	R_B	$E(R_i)$	$R_B - E(R_i)$	$[R_B - E(R_i)]^2$	$p_i \times \{R_B - E(R_i)\}^2$
0.1	26%	14%	12%	144%	14.4%
0.5	18%	14%	4%	16%	8%
0.3	8%	14%	-6%	36%	10.8%
0.1	0%	14%	-14%	196%	19.6%

Return and Risk from securities of Bhavana Limited is denoted as R_B, and σ_B respectively.

$\sigma_B = \sqrt{(14.4\% + 8\% + 10.8\% + 19.6\%)} = 7.27\%$.

(c) Co-movements can be studied between securities by computing the Covariance and the association can be studied using correlation coefficient between securities.

Covariance between securities $Cov._{(S', B)} = \sum p_i \times \{R_{S'} - E(R_i)\} \times \{R_B - E(R_i)\}$

Or, $Cov._{(S', B)} = (8.4\% + 4\% + 5.4\% + 11.2\%) = 29\%$

Table showing computation of Covariance between securities

Probability (p_i)	$\{R_{S'} - E(R_i)\}$	$\{R_B - E(R_i)\}$	$p_i \times \{R_{S'} - E(R_i)\} \times \{R_B - E(R_i)\}$
0.1	7%	12%	8.4%
0.5	2%	4%	4%
0.3	-3%	-6%	5.4%
0.1	-8%	-14%	11.2%

Value of correlation coefficient $[r_{(S', B)}] = Cov._{(S', B)} / \sigma_{S'} \times \sigma_B = 29\% / 4\% \times 7.27\% = 0.9972$

As both the risk and return is high in case of Bhavana Limited we need to use the Coefficient of Variation to determine where to invest funds.

Coefficient of Variation = Expected Return / Std. Deviation of Returns

It basically replicates the return from securities for each degree of risk taken. Lower the proportion higher the eligibility of a security to qualify for investment.

Company Name	Sambhavana Limited	Bhavana Limited
Coefficient of Variation	3.25	1.93

It is clear from the above measure that investment in Bhavana Limited is better than to invest in Sambhavana Limited. It is thereby recommended to invest in securities of Bhavana Limited.

5. Following information is available in relation to the companies under pharmaceutical industry.

Company Name	Cipla	Ranbaxy
Expected Return	12%	18%
Standard Deviation of Returns	0.16	0.24

Construct portfolios with the following weights and determine the expected return on each of such asset-mix along with the degree of risk association with the respective returns, when value of correlation coefficient between securities are exactly 1, -1, 0, and 0.5.

Cipla	1	0.8	0.6	0.4	0.2	0
Ranbaxy	0	0.2	0.4	0.6	0.8	1
Total Weight	1	1	1	1	1	1

Answer:

Required Formulas:

Expected Return from a Portfolio [E (R_P)] = $\sum w_i \times R_i$

Expected Risk from a Portfolio (σ_P) = $\sqrt{(w_I^2 \times \sigma_I^2) + (w_J^2 \times \sigma_J^2) + 2 \times w_I \times w_J \times \sigma_I \times \sigma_J \times r_{(I,J)}}$

Where, $-1 < r_{(I,J)} < 1$, and 'I' and 'J' are two securities.

And when $r_{(I,J)} = \pm 1$, then we use the following equations which are derived form of the above one.

- Expected Risk from a Portfolio (σ_P) = $\{(w_I \times \sigma_I) + (w_J \times \sigma_J)\}$, when, r = +1,
- Expected Risk from a Portfolio (σ_P) = $\{(w_I \times \sigma_I) - (w_J \times \sigma_J)\}$, when, r = -1.

Using the formulas stated above we find the following table as result of the required questions regarding Expected Return from a Portfolio and Expected Risk from the same Portfolio at different combinations of investible funds and at different degrees of associations between securities.

Combinations of Weight		Portfolio Return [E (R_P)]	Portfolio Risk (σ_P)			
Cipla	Ranbaxy		r = +1	r = -1	r = 0	r = 0.5
1	0	12%	16%	16%	16%	16%
0.8	0.2	13.2%	17.6%	8%	13.67%	15.76%
0.6	0.4	14.4%	19.2%	0%	13.58%	16.63%
0.4	0.6	15.6%	20.8%	8%	15.76%	18.45%
0.2	0.8	16.8%	22.4%	16%	19.46%	20.98%
0	1	18%	24%	24%	24%	24%

6. A Portfolio Manager has the following four stocks in his portfolio:

Security	No of shares	Market Price (₹) per share	β = Beta
A	12,000	40	0.9
B	6,000	20	1.0
C	10,000	25	1.5
D	2,000	225	1.2

Compute the following:

(a) Portfolio Beta (β)

(b) If the Portfolio Manager seeks to reduce the Beta to 0.8, how much risk-free investment should he bring in? Verify the result.

Answer:

(a) Portfolio Beta

Security	No of Shares	Market price per share	Value Amount (₹)	% of Total Amount	Beta	Weighted Beta
A	12,000	40	4,80,000	0.3692	0.9	0.3323
B	6,000	20	1,20,000	0.0923	1.0	0.0923
C	10,000	25	2,50,000	0.1923	1.5	0.2885
D	2,000	225	4,50,000	0.3462	1.2	0.4154
			13,00,000	1.000		1.129

Hence Portfolio Beta (β) = 1.129

(b) Required Beta = 0.8

It should become 0.8/1.129=70.86% of the present portfolio.

If ₹13,00,000 is 70.86%

Total Portfolio should be = $\frac{13,00,000 \times 100}{70.86\%}$ = ₹18,34,600

Additional investment in zero risk should be = ₹ (18,34,600 –13,00,000) = ₹ 5,34,600

Revised Portfolio will be:

Security	No of Shares	Market price per share	Value Amount (₹)	% of Total Amount	Beta	Weighted Beta
A	12,000	40	4,80,000	0.2616	0.9	0.2354
B	6,000	20	1,20,000	0.0654	1.0	0.0654
C	10,000	25	2,50,000	0.1363	1.5	0.2045
D	2,000	225	4,50,000	0.2453	1.2	0.2944
Risk Free Asset	53,460	10	5,34,600	0.2914	0	0
			18,34,000	1.000		0.7997 or 0.80

7. An investor estimates return on shares in two different companies under four different scenarios as under:

Scenario	Probability of its happening	Return on Security A (%)	Return on Security B (%)
I	**0.2**	**12**	**10**
II	**0.4**	**16**	**20**
III	**0.3**	**18**	**25**
IV	**0.1**	**25**	**30**

You are required to:

(i) Calculate Expected rate of return if the investor invests all his funds in Security A alone or in Security B alone.

(ii) Determine the preferred security based on return.

(iii) Ascertain the risk associated with each of the security.

(iv) If the investor invests 40% in Security A and 60% in Security B, what is the expected return and the associated risk.

Answer:

(i) and (iii) Expected Returns and Risks Associated of Securities A and B

Expected Return and Risk of Security A

Scenario	Probability (P)	Return (%)	Expected Return (%) =	Deviation (D) from mean	Deviation square (D^2)	Variance
(1)	(2)	(3)	(4)= (2)*(3)	5=(3)- Σ (4)]	(6)=[(3)- Σ (4)]^2	6=(2)*(5)
I	0.2	12	2.4	-4.7	22.09	4.418
II	0.4	16	6.4	-0.7	0.49	0.196
III	0.3	18	5.4	1.3	1.69	0.507
IV	0.1	25	2.5	8.3	68.89	6.889
			16.7			12.01

Expected return on Security A = 16.7%

Risk on Security A (σ) = $\sqrt{\text{Variance}} = \sqrt{12.01}$ = 3.465

Expected Return and Risk of Security B

Scenario	Probability (P)	Return (%)	Expected Return (%) =	Deviation (D) from mean	Deviation square (D^2)	Variance
(1)	(2)	(3)	(4)= (2)*(3)	5=(3)- Σ (4)]	(5)=[(3)- Σ (4)]^2	6=(2)*(5)
I	0.2	10	2.0	-10.5	110.25	22.05
II	0.4	20	8.0	-0.5	0.25	0.1
III	0.3	25	7.5	4.5	20.25	6.075
IV	0.1	30	3.0	9.5	90.25	9.025
			20.5			37.25

Expected return on Security A = 20.5%

Risk on Security A (σ) = $\sqrt{\text{Variance}} = \sqrt{37.25}$ = 6.103

(ii) Expected return of Security B is higher than the Security A. So the investor will prefer Security B in terms of Return.

(iv) Expected Return and Risk of Portfolio

Computation of Covariance of Securities A and B

Scenario	Probability (P)	Deviation from Mean for A (%)	Deviation from Mean for B (%)	Deviation Product	Covariance
(1)	(2)	(3)	(4)	(5)	(6)=(2)*(5)
I	0.2	-4.7	-10.5	49.35	9.87
II	0.4	-0.7	-0.5	0.35	0.14
III	0.3	1.3	4.5	5.85	1.755
IV	0.1	8.3	9.5	78.85	7.885
					19.65

Covariance of Securities A and B = 19.65

Correlation coefficient of Securities A and B = Cov (A and B) ÷ (S.D. of A and S.D of B)

= 19.65/(3.465*6.103)=0.9292

Risk of portfolio i.e. standard deviation of Portfolio A and B [40% and 60% Ratio]

(σ) A and B = $\sqrt{(3.465^2 \times 0.40^2) + (6.103^2 \times 0.60^2) + 2 \times 0.9292(3.465 \times 0.40 \times 6.103 \times 0.60)}$

= $\sqrt{1.921 + 13.408 + 9.431} = \sqrt{24.76}$ = 4.975

Return = 40% of Return of Security A + 60% of Security B

= 0.4016.7% + 0.6020.5% = 18.98%

8. Two securities X and Y have standard deviations of 4% and 10%. An investor is having a surplus of ₹10 Lakh for investment in these two securities. How much should he invest in each of these securities to minimize risk, if the correlation coefficient for X and Y is — (a) -1; (b) -0.40; (c) 0

Answer:

Weight of Security X	W_X	a
Weight of Security Y	W_Y	1-a

Proportion of Investment in Security X, $W_X = \dfrac{\sigma Y^2 - Cov_{XY}}{\sigma X^2 + \sigma Y^2 - 2Cov_{XY}}$

Proportion of Investment in Security Y, $W_Y = 1 - W_X$

$Cov_{XY} = \rho XY \times \sigma X \times \sigma Y$

If r_{XY} is	Cov_{XY} is	Computation	Investment
-1	(-1*4*10) = -40	Proportion of Investment in Security X, W_x =[10^2-(-40)]/[4^2+10^2-2(-40)]	.714X
		Proportion of Investment in Security X, W_y=(1-.714)Y	.286Y
		Investment in X of ₹10 lakh	714000
		Investment in Y of ₹10 lakh	286000
-.40	(-.4*4*10) = -16	Proportion of Investment in Security X, W_x =[10^2-(-16)]/[4^2+10^2-2(-16)]	.784X
		Proportion of Investment in Security X, W_y=(1-.714)Y	.216Y
		Investment in X of ₹10 lakh	784000
		Investment in Y of ₹10 lakh	216000
0	(0*4*10) = 0	Proportion of Investment in Security X, W_x =[10^2-0)]/[4^2+10^2-2(0)]	.862X
		Proportion of Investment in Security X, W_y=(1-.714)Y	.138Y
		Investment in X of ₹10 lakh	862000
		Investment in Y of ₹10 lakh	128000

9. As an investment manager, you are given the following information:

Investment	Initial price (₹)	Dividend	Market price	Beta
Equity shares of				
A Ltd.	**70**	**5**	**140**	**0.8**
B Ltd.	**80**	**5**	**150**	**0.7**
C Ltd.	**90**	**5**	**270**	**0.5**
Govt. of India Bonds	**1000**	**160**	**1010**	**0.95**

Risk free return may be taken at 16%.

You are required to calculate:

(a) Expected rate of return of portfolio using CAPM.

(b) Average return of Portfolio.

Answer:

Calculation of expected rate of return of Portfolio

Investment	Amount	Market price	Capital Gain	Dividend	Total
Equity shares of					
A	70	140	70	5	75
B	80	150	70	5	75
C	90	270	180	5	185
Govt. of India Bond	1,000	1,010	10	160	170
Total	1,240	1,570	330	175	505

(a) Expected rate of return on portfolio = (505/1240)×100 = 40.73%

CAPM Model

$E[RP] = R_M+\beta(R_M-R_F)$

A Ltd. =16+0.8 (40.73-16) = 35.78%

B Ltd. = 16+0.7 (40.73-16) = 33.31%

C Ltd. = 16+0.5 (40.73-16) = 28.37%

Govt. of India Bonds = 16+0.95(40.73-16) = 39.49%

(b) Simple average return of portfolio = 935.78 + 33.31 + 28.37 + 39.49)/4 = 34.24%

Average of Beta = (0.80 + 0.70 + 0.50 + 0.95)/4 = 0.7375

Alternative Approach for Average Return:

Weighted Average Return

Securities	Cost	Proportion	Expected Return	Weighted Return (%)
A	70	0.056	35.78	2.004
B	80	0.065	33.31	2.132
C	90	0.073	28.37	2.043
Govt. of India Bonds	1,000	0.806	39.49	31.829
	1,240	1,000		38.008

10. An investor has two portfolios known to be on minimum variance set for a population of three securities A, B and C below mentioned weights —

	W_A	W_B	W_C
Portfolio X	**0.30**	**0.40**	**0.30**
Portfolio X	**0.20**	**0.50**	**0.30**

It is supposed that there are no restrictions on short sales.

(a) What would be the weight for each stock for a portfolio constructed by investing ₹6,00,000 in Portfolio X and ₹4,00,000 in Portfolio Y?

(b) Suppose the investor invests ₹5,00,000 out of ₹10,00,000 in Security A. How he will allocate the balance between security B and C to ensure that his portfolio is on minimum variance set?

Answer:

(a) Investment in Individual Securities

Security	Portfolio X	Portfolio Y	Total	Weight
A	6,00,000 x 0.30 = 1,80,000	4,00,000 x 0.20 = 80,000	2,60,000	2,60,000 ÷ 10,00,000 = 0.26
B	6,00,000 x 0.40 = 2,40,000	4,00,000 x 0.50 = 2,00,000	4,40,000	4,40,000 ÷ 10,00,000 = 0.44
C	6,00,000 x 0.30 = 1,80,000	4,00,000 x 0.30 = 1,20,000	3,00,000	3,00,000 ÷ 10,00,000 = 0.30
	6,00,000	4,00,000	10,00,000	1.0000

(b) Investment Strategy to Ensure Minimum Variance

Given the following equations $\mathbf{W_A}$ = 0.50 (₹5,00000 ÷ ₹10,00000)

$\mathbf{W_A} + \mathbf{W_B} + \mathbf{W_C} = 1$

Therefore it naturally follows that

$\mathbf{W_B} + \mathbf{W_C} = 0.50$ ...(1)

A simple linear equation establishing an equation between two variables $\mathbf{W_A}$ and $\mathbf{W_B}$ or the Variables $\mathbf{W_B}$ and $\mathbf{W_C}$ in the given manner—

$\mathbf{W_C} = a + b\ \mathbf{W_B}$

Substituting the values of $\mathbf{W_A}$&$\mathbf{W_B}$ from the data given (Portfolio X and Y), we get -

0.30 = a + b x 0.40

0.30 = a + b x 0.50

b = 0

a = 0.30

$W_C = 0.30 - W_B$

or

$W_C + 0\ W_B = 0.30$ ...(2)

Therefore solving (1) and (2) we get $W_C = 0.30$ and $W_B = 0.20$

Conclusion: Allocation of Funds -

A = ₹5,00000 (Given)

B= 0.20 x ₹10,00000 = ₹2,00000

C= 0.30 x ₹10,00000 = ₹3,00000

Alternatively,

Since the Proportion of Investment in C is 0.30 and is constant across both the Portfolio, any linear equation drawnfrom the Data given would result in the Weight of C being a constant 0.30.

Therefore W_A= 0.50 (Given), W_C = 0.30 (Constant), therefore W_B = 0.20 (W_B= 1- 0.50 - 0.30 = 0.20).

11. The following information is available regarding three Mutual Fund schemes.

Mutual Fund	Average Return	Standard Deviation	Correlation with market
X	24%	8%	0.30
Y	16%	4%	0.70
Z	12%	3%	0.50

If the risk free return is 6%, return on market portfolio is 15% with a standard deviation of 4%, ascertain:

(a) Total gain and net gain under Fama's Net Selectivity.

(b) Systematic Risk and Unsystematic Risk.

Answer:

Particulars	X	Y	Z
Average Return (R_P)	24%	16%	12%
Standard Deviation (σ_P) (Total Risk)	8%	4%	3%
Correlation with Market	0.30	0.70	0.50
Portfolio Beta (β_P) = $P_{PM} \times \sigma_P \div \sigma_M$	0.6	0.7	0.375
	(0.30×8÷4)	(0.70×4÷4)	(0.50×3÷4)

A. Actual Risk Premium (R_P - R_F)	(24-6)= 18%	(16-6)=10%	(12-6)=6%
Computation of Net Gain:			
B. Desired Risk Premium [(R_P - R_F) × σ_P÷ σ_M]	(9%×8÷4)=18%	(9%×4÷4)=9%	(9%×3÷4)=6.75%
Fama's Net Selectivity (Net Gain) i.e. (A-B)	0%	1%	0.75%
Computation of Total Gain i.e. Jensen's Alpha			
C. Desired Risk Premium [(R_P - R_F × σ_P÷ σ_M])×ρ_{PM} or Risk Premium in B × ρ_{PM}	5.4% (18%×0.30)	6.3% (9%×0.70)	3.375% (6.75×0.50)
Total Gain (A-C)	12.6%	3.7%	2.625%
Systematic and Unsystematic Risk			
Systematic Risk (σ_P× β_P)	(8%×0.6)=4.8%	(4×0.7)=2.8%	(3×0.375)=1.125%
Unsystematic Risk	(8-4.8)=3.2%	(4-2.8)= 1.2%	(3-1.125)=1.875%

Notes:

1. Risk Free Return (R_F) = 6%
2. Market Return (R_M) = 15%
3. Market Standard Deviation = σ_M = 4%
4. Market Risk Premium = R_M - R_F = 15% – 6% = 9%

Study Note – 9

FINANCIAL RISKS

Learning Objective: ***After studying this chapter, the students will be able to:***

- ***Understand risk, identify operational risk, liquidity risk, Operational risk and Foreign Exchange Risk.***

1. What is operational risk? Identify operational risk losses.

Answer:

Operational risk is the risk that is not inherent in financial, systematic or market-wide risk. It is the risk remaining after determining financing and systematic risk, and includes risks resulting from breakdowns in internal procedures, people and systems.

Operational risk losses include internal frauds (insider trading, misappropriation of assets)or external frauds like theft, natural disasters like terrorism or system related failures like M&A related disruption and other technological breakdowns. However, operational risk is harder to quantify and model than market and credit risks.

2. How to assess and mitigate Market Risk?

Answer:

The potential loss amount due to market risk may be measured in a number of ways or conventions. Traditionally, one convention is to use Value at Risk (VaR). The conventions of using VaR are well established and accepted in the short-term risk management practice. However, it contains a number of limiting assumptions that constrain its accuracy. The first assumption is that the composition of the portfolio measured remains unchanged over the specified period. Over short time horizons, this limiting assumption is often regarded as reasonable. However, over longer time horizons, many of the positions in the portfolio may have been changed. The Value at Risk of the unchanged portfolio is no longer relevant.

- Market risk cannot be eliminated through diversification, though it can be hedged against.
- Financial risk, market risk, and even inflation risk, can at least partially be moderated by diversification.
- The returns from different assets are highly unlikely to be perfectly correlated and the correlation may sometimes be negative. However, share prices are driven by many factors, such as the general health of the economy which will increase the correlation and reduce the benefit of diversification.

- If one constructs a portfolio by including a wide variety of equities, it will tend to exhibit the same risk and return characteristics as the market as a whole, which many investors see as an attractive prospect.
- However, history shows that even over substantial periods of time there is a wide range of returns that an index fund may experience; so an index fund by itself is not "fully diversified". Greater diversification can be obtained by diversifying across asset classes; for instance a portfolio of many bonds and many equities can be constructed in order to further narrow the dispersion of possible portfolio outcomes.

3. Discuss the different types of Credit Risks.

Answer:

Credit risk can be classified in the following way:

(i) **Credit default risk**: The risk of loss arising from a debtor being unlikely to pay its loan obligations in full or the debtor is more than 90 days past due on any material credit obligation; default risk may impact all credit sensitive transactions, including loans, securities and derivatives.

(ii) **Counterparty risk:** The risk of loss arising from non performance of counterparty in trading activities such as buying and selling of commodities, securities, derivatives and foreign exchange transactions. If inability to perform contractual obligations in such trading activities is communicated before the settlement date of the transaction, then counterparty risk is in the form of pre-settlement risk, while if one of the counterparty defaults on its obligations on the settlement date, the counterparty risk is in the form of settlement risk.

(iii) **Concentration risk**: The risk associated with any single exposure or group of exposures with the potential to produce large enough losses to threaten a lender's core operations. It may arise in the form of single name concentration or industry concentration.

(iv) **Country risk**: The risk of loss arising from sovereign state freezing foreign currency payments (transfer/conversion risk) or when it defaults on its obligations (sovereign risk).

4. Identify the causes of liquidity risks.

Answer:

Market liquidity risk arises from situations in which a party interested in trading an asset cannot do it because nobody in the market wants to trade for that asset. Liquidity risk becomes particularly important to parties who are about to hold or currently hold an asset, since it affects their ability to trade. Manifestation of liquidity risk is very different from a drop of price to zero. The important causes of liquidity risk are:

(i) In case of a drop of an asset's price to zero, the market is saying that the asset is worthless. However, if one party cannot find another party interested in trading the asset, this can potentially be only a problem of the market participants with finding each other. This is why liquidity risk is usually found to be higher in emerging markets or low-volume, less-structured markets.

(ii) On the other hand, funding liquidity risk is a financial risk due to uncertain liquidity. An institution might lose liquidity if its credit rating falls, it experiences sudden unexpected cash outflows, or some other event causes counterparties to avoid trading with or lending to the institution. A firm is also exposed to liquidity risk if markets on which it depends are subject to loss of liquidity.

5. Write a short note on Asset-Backed Risk.

Answer:

It is the risk that the changes in values of one or more assets that support an asset-backed security will significantly impact the value of the supported security. This kind of risk especially arises in securitization transactions where by cash flows due on assets/receivables are pooled together to issue securities, the servicing of which is backed by the cash flows on such underlying assets. The factors that may cause changes in values of assets backing the securities include interest rate, term modification, and prepayment risk.

Prepayment Risk: Prepayment is the event that a borrower prepays the loan prior to the scheduled repayment date. Prepayment takes place when the borrowers can benefit from it, for example, when the borrowers can refinance the loan at a lower interest rate from another lender. Prepayments result in loss of future interest collections because the loan is paid back pre-maturely and can be harmful to the loan-backed securities, especially for long term securities. A second, and maybe more important consequence of prepayments, is the impudence of un-scheduled prepayment of principal that will be distributed among the securities according to the priority of payments, reducing the outstanding principal amount, and thereby affecting their weighted average life.

If an investor is concerned about a shortening of the term about contraction risk and the opposite would be the extension risk, the risk that the weighted average life of the security is extended. In some circumstances, it will be borrowers with good credit quality that prepay and the credit quality pool backing securities will deteriorate as a result. Other circumstances will lead to the opposite situation.

6. What is Foreign Investment Risk? What are its causes?

Answer:

Foreign Investment Risk is associated with investment in foreign securities and assessing foreign investment risk means looking closely at what is happening in the country of origin of security. The general economy of that country will have some impact on the future business operations of the issuer. Foreign investment risk involves considering the degree of political risk associated with the holding. The important causes are: Changes in currency exchange rates, Dramatic changes in market value, Political, economic and social events, Lack of liquidity and Less information.

Study Note – 10

FINANCIAL DERIVATIVES–INSTRUMENTS FOR RISK MANAGEMENT

Learning Objective: ***After studying this chapter, the students will be able to:***

- ***determine forward and future price, calculate margin, calculate time value and intrinsic value of option and valuation of option contracts.***

1. Choose the correct alternative.

(i) An investor bought 2,000 shares of X Ltd. for ₹90 per share. The initial margin is 50%. The maintenance margin is 40%. If the stock price decreases to ₹70 per share. The additional funds put by the investors to his margin account is –

(a) ₹20,000

(b) ₹20,500

(c) ₹21,000

(d) ₹22,000

(ii) What should be the price of call, if value of a put ₹5, strike price ₹100, rate of interest 6% p.a. , time period -2 months?

(a) ₹4

(b) ₹5

(c) ₹6

(d) ₹7

(iii) An investor purchases a July Call Option of X Ltd. with a strike price of ₹100 for a premium of ₹7. Till what level the investor will not realize his profit.

(a) ₹ 105

(b) ₹107

(c) ₹110

(d) ₹115

(iv) In a put-call parity, the pay-offs of buying stock can be replicated by:

(a) Buying a call and buying a put option

(b) Buying a call and writing a put option

(c) Writing a call and buying a put option

(d) Writing a call and writing a put option

(v) A stock is currently sells at ₹350. The put option to sell the stock sells at ₹380 with a premium of ₹20. The time value of option will be

(a) ₹10

(b) ₹10

(c) ₹20

(d) 0

(vi) The spot value of NIFTY is 6430. An investor bought a two month NIFTY for 6410 call option for a premium of ₹ 24. The option is

(a) In-the Money

(b) At-the Money

(c) Out-of the Money

(d) Insufficient Data

(vii) Shares of C Ltd. is traded at ₹1,150. An investor is bullish about the market. He buys two one month call option contracts (one contract is 100 shares) on C Ltd. with a strike price of ₹1,195 at a premium of ₹35 per share. Three months later, if the share is selling at ₹1240 what will be net profit/loss of the investor on the position?

(a) ₹1000

(b) ₹1200

(c) ₹1500

(d) ₹2000

(viii) A stock index currently stands at 7000. The risk free interest rate is 8% p.a. continuously compounded and the dividend yield on the index is 4% p.a. What should be the futures price for a four month contract? [Given $e^{(.08-.04)4/12} = 1.013423$]

(a) 7093.96

(b) 7097.34

(c) 7098.68

(d) 7099.25

(ix) A 6-month forward contract on a non-dividend paying stock when the stock price is ₹ 60 and the risk-free interest rate (with continuous compounding) is 12% p.a. What is the forward price? [Given $e^{0.06}$ = 1.0618]

(a) ₹61.86

(b) ₹62.23

(c) ₹64.23

(d) ₹65.27

(x) If you sell a call option on a share with a strike price of ₹ 375, market price of ₹360, and a premium of ₹ 21.What is the maximum loss on expiry of this position?

(a) ₹ 354

(b) Unlimited

(c) ₹ 396

(d) None of these

Answer:

Question	(i)	(ii)	(iii)	(iv)	(v)	(vi)	(vii)	(viii)	(ix)	(x)
Answer:	(a)	(c)	(b)	(b)	(d)	(a)	(d)	(a)	(a)	(b)

2. On 31.8.2018, the value of stock index was ₹ 8,800. The risk free interest rate has been 8% p.a.. The dividend yield on this stock index is as under:

Month	**June**	**July**	**August**	**September**	**October**	**November**	**December**
Dividend Paid p.a.	**3%**	**4%**	**3%**	**3%**	**4%**	**3%**	**3%**

The duration of the contract is four months and the interest is calculated continuously compounded daily. You are required to calculate the future price of contract deliverable on 31.12.2018. ($e^{0.01583}$ = 1.01593)

Answer:

The average yield during this period : (3%+4%+3%+3%)/4=3.25%

As per cost of carry model the future price will be

$F = Se^{(r-d)t}$:

F = Future price

S = Spot Price

r = Risk free rate of return

d = Divided yield

t = Time period

So the future price would be

= ₹8,800 x $e^{(0.08-0.0325)4/12}$

= ₹ 8,800 x 1.01593 = 8940.184

3. An investor has bought a futures contract on the stock of Maruti Udyog Ltd. at ₹410. Each contract consists of 400 shares. The initial margin is set by the exchange at 5%, while the maintenance margin is 90% of the initial margin. Clearing prices of the stock for next 10 days are given below:

Day	1	2	3	4	5	6	7	8	9	10
Price (₹)	410	420	400	390	440	441	450	460	455	465

Assume that on the 10th day, the investor squares off his position at ₹465. Find out the gain and losses of long and short positions of the investor. You are requested to show all necessary calculations.

Answer:

Day	Clearing price	Profit/Loss for Day		Margin Account		Margin Call	
		Long Position	Short Position	Long Position	Short Position	Long Position	Short Position
1.	410	-	-				
2	420	10*400 = 4000	-4000	8200+4000 =12200	8200-4000 =4200		8200-4200 =4000
3.	400	-20*400 = -8000	8000	12200-8000 =4200	8200+8000 =16200	8200-4200 =4000	
4.	390	-10*400 = -4000	4000	8200-4000 =4200	16200+4000 =20200	8200-4200 =4000	
5.	440	50*400 = 20000	-20000	8200+20000 =28200	20200-20000 =200		8200-200 =8000
6.	441	1*400 = 400	-400	28200+400 =28600	8200-400 =7800		
7.	450	9*400 = 3600	-3600	28600+3600 =32200	7800-3600 =4200		8200-4200 =4000
8.	460	10*400=4000	-4000	32200+4000 =36200	8200-4000 =4200		8200-4200 =4000
9.	455	-15*400 = -6000	6000	36200-6000 =30200	8200+6000 =14200		
10.	465	10*400 = 4000	-4000	30200+4000 =34200	14200-4000 =10200		

Profit/Loss = Final Margin Position—Initial margin position-Margin call paid

Margin Call paid = Long Position = ₹8000; Short position = ₹12000

Long Position profit/loss: = ₹ (34200-8200-8000) = ₹18000

Short position profit/loss: = ₹ (10200-8200-20000) = ₹(28200-10200) = ₹18000

Minimum margin: ₹410×400×5% = ₹8200

Maintenance margin: ₹ 6560×90% = ₹7380

4. A portfolio manager owns three stocks and its details are under:

Stock	Shares owned	Stock Price (`)	Beta
X	4 Lakh	400	1.1
Y	8 Lakh	300	1.2
Z	12 lakh	100	1.3

The BSE-SENSEX is at 28000 and futures price is 28560. Use stock index futures to (i) decrease the portfolio beta to 0.8 and (ii) increase the portfolio beta to 1.5. Assume the index factor is 100. Find out the number of contacts to be bought or sold of stock index futures.

Answer:

Computation of existing portfolio beta

Stock	Market value of stock (₹ in Lakh)	Proportion	Beta of the stock	Weighted beta
X	1600	4/13	1.1	0.34
Y	2400	6/13	1.2	0.55
Z	1200	3/13	1.3	0.30
	5200			1.19

Value per futures contract = Index price per contract × Lot size per futures contract

= ₹28000×100 = ₹28,00,000

(i) To reduce portfolio beta to 0.8, the manager should sell index futures contract.

- Portfolio Value = ₹5,200 Lakh
- Value per futures contract = Index price per contract*Lot size per futures contract

  = ₹28000*100 = ₹28,00,000
- Beta of the existing portfolio = 1.19
- Desired beta of the new portfolio = 0.8

- No of Contracts to be sold = Portfolio Value × $\frac{\text{(Beta of the Portfolio - Desired Value of Beta)}}{\text{Value of the Futures Contract}}$

No of Contracts = 5,200 Lakh × $\frac{(1.19 - 0.8)}{28\text{ Lakh}}$ = 72 contracts

(ii) To increase the portfolio beta to 1.5 the manager should buy index futures contract.

- Portfolio Value = ₹ 5,200 Lakh
- Value per futures contract = Index price per contract × Lot size per futures contract

  = ₹ 28,000 × 100 = ₹ 28,00,000 = ₹28 Lakh
- Beta of the existing portfolio=1.19
- Desired beta of the new portfolio =1.5
- No of Contracts to be sold = Portfolio Value × $\frac{\text{(Desired Value of Beta - Beta of the Portfolio)}}{\text{Value of the Futures Contract}}$

No of Contracts to be bought = 5,200 Lakh × $\frac{(1.5 - 1.9)}{28\text{ Lakh}}$ = 57.57 = 58 contracts

5. XYZ Ltd. shares are presently quoted at ₹100. The 3 Month Call Option carries a premium of ₹15 for an Exercise Price of ₹120 and a 3 Month's put option carries a premium of ₹20 for a strike price ₹120.

If the spot price on the expiry date is in the range of ₹90 to ₹160 with an interval of ₹5, calculate Net Pay-Off for both call option and put option from the option buyer's perspective and option writer's perspective.

Answer:

Calculation of Net Payoff of Call Option Buyer and Writer

Call Option						
Spot Price	**Exercise Price (₹)**	**Gross Payoff**	**Premium**	**Action**	**Net Payoff (Long/Buyer)**	**Net Payoff (Short/Seller)**
90	120	0	15	Lapse	(15)	15
95	120	0	15	Lapse	(15)	15
100	120	0	15	Lapse	(15)	15
105	120	0	15	Lapse	(15)	15
110	120	0	15	Lapse	(15)	15
115	120	0	15	Lapse	(15)	15
120	120	0	15	Lapse	(15)	15
125	120	5	15	Exercise	(10)	10
130	120	10	15	Exercise	(5)	5
135	120	15	15	Exercise	0	0
140	120	20	15	Exercise	5	(5)
145	120	25	15	Exercise	10	(10)

150	120	30	15	Exercise	15	(15)
155	120	35	15	Exercise	20	(20)
160	120	40	15	Exercise	25	(25)

Put Option						
Spot Price	Exercise Price (₹)	Gross Payoff	Premium	Action	Net Payoff (Long/Buyer)	Net Payoff (Short/Seller)
90	120	30	20	Exercise	10	(10)
95	120	25	20	Exercise	5	(5)
100	120	20	20	Exercise	0	0
105	120	15	20	Exercise	(5)	5
110	120	10	20	Exercise	(10)	10
115	120	5	20	Exercise	(15)	15
120	120	0	20	Lapse	(20)	20
125	120	(5)	20	Lapse	(20)	20
130	120	(10)	20	Lapse	(20)	20
135	120	(15)	20	Lapse	(20)	20
140	120	(20)	20	Lapse	(20)	20
145	120	(25)	20	Lapse	(20)	20
150	120	(30)	20	Lapse	(20)	20
155	120	(35)	20	Lapse	(20)	20
160	120	(40)	20	Lapse	(20)	20

6. The following data relates to share price of A Ltd.:

Current price per share ₹1,800

6 months future's price/share ₹1,950

Assuming it is possible to borrow money in the market for transactions in securities at 12% perannum, you are required:

(i) to calculate the theoretical minimum price of a 6-months forward purchase; and

(ii) to explain arbitrate opportunity.

Answer:

(i) Calculation of theoretical minimum price of a 6 months forward contract-

Theoretical minimum price = ₹1,800 + (₹1,800 x 12/100 x 6/12) = ₹1,908

(ii) Arbitrage Opportunity-

The arbitrageur can borrow money @ 12 % for 6 months and buy the shares at ₹1,800.

At the same time he can sell the shares in the futures market at ₹1,950. On the expiry date 6 months later, he could deliver the share and collect ₹1,950 pay off ₹1,908 and record a profit of ₹42 (₹1,950 – ₹1,908)

7. Consider a two year American call option with a strike price of ₹100 on a stock the currentprice of which is also ₹100. Assume that there are two time periods of one year and in eachyear the stock price can move up or down by equal percentage of 20%. The risk free interestrate is 6%. Using binominal option model, calculate the probability of price moving up anddown. Also draw a two step binomial tree showing prices and payoffs at each node.

Answer:

Stock prices of two-stage binomial model

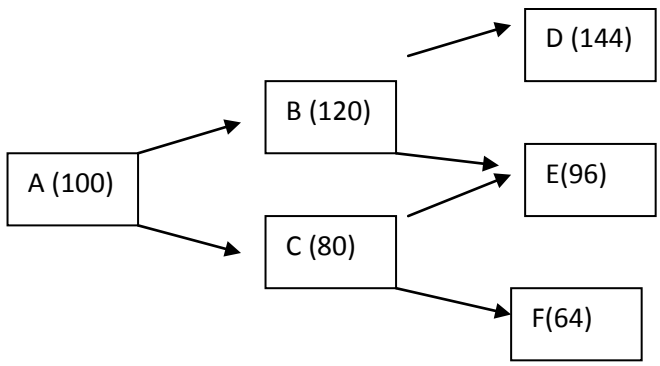

Using the single period model, the probability of price increase is

$P = \frac{(1+r)-d}{u-d} = \frac{1.06-0.80}{1.20-0.80} = \frac{0.260}{0.40} = 0.65$ With continuous compounding $\left[p = \frac{e^{rt}-d}{u-d}\right]$

P = Probability

r = Risk free interest rate = 6% = 0.06

d = Downward movement i.e.20% = 1-0.20 = 0.80

u = Upward movement i.e. = 1 + 0.20 =1.20

Therefore the p of price decrease = 1– 0.65 = 0.35

The two step Binominal tree showing price and pay off

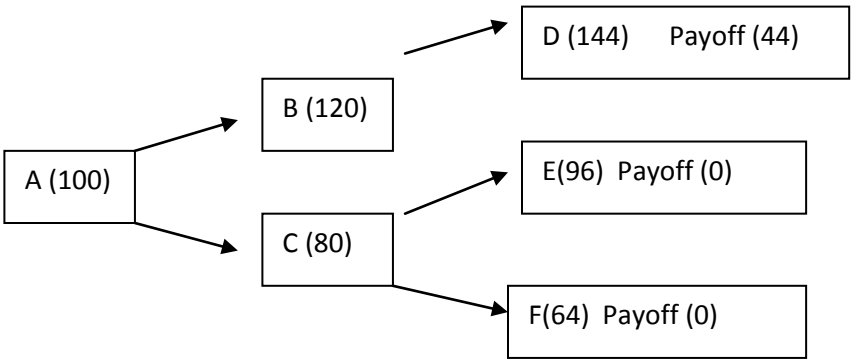

The value of an American call option at nodes D, E and F will be equal to the value of European option at these nodes and accordingly the call values at nodes D, E and F will be 44, 0 and 0 using the single period binomial model the value of call option at node B is

$$C = \frac{\text{Payoff of at Node}\times(p)\text{Payoff at Node E}\times(1\text{-})p}{} = \frac{44 * 0.65 + 0.35}{1 + 0.06} = \frac{0.260}{0.40} = 26.98$$

$C = e^{-rt}\,[f_u p + f_d\,(1-p)$ where f_u payoff at D and f_d payoff at E, with continuous compounding

At node B the payoff from early exercise will pay ₹ 20, which is less than the value calculated using the single period binomial model. Hence at node B, early exercise is not preferable and the value of American option at this node will be ₹ 13.49. If the value of an early exercise had been higher it would have been taken as the value of option. The value of option at node 'A' is

$$\frac{26.98 * 0.65 + 0 * 0.35}{1 + 0.06} = \frac{0.260}{0.40} = 25.45$$

8. From the following data for certain stock, find the value of a call option using Black-Scholes Model :

Price of stock now = ₹80

Exercise price = ₹75

Standard deviation of continuously compounded annual return = 0.40

Maturity period = 6 months

Annual interest rate = 12%

[Given 1.062; In 1.0667 = 0.0646; N (0.5820) = 0.7197; N(0.2992) = 0.6176]

Answer:

Applying the Black-Scholes Formula,

Value of the Call option now:

The Formula C = SN(d) - $Ke^{(-rt)}$ N(d2)

$$d_1 = \frac{\ln(S/K) + (r + \sigma^2/2)t}{\sigma\sqrt{t}}$$

$$d_2 = d_1 - \sigma\sqrt{t}$$

Where,

C = Theoretical call premium

S = Current stock price

t = time until option expiration

K = option striking price

r = risk-free interest rate

N = Cumulative standard normal distribution

e = exponential term

σ = Standard deviation of continuously compounded annual return.

In = natural logarithm

$$d_1 = \frac{\ln(1.0667) + (12\% + 0.08)0.5}{0.40\sqrt{0.5}}$$

$$= \frac{0.0646 + (0.2)0.5}{0.40 \times 0.7071}$$

$$= \frac{0.1646}{0.2828}$$

= 0.5820

d2 = 0.5820 – 0.2828 = 0.2992

N(d1) = N (0.5820)

N(d2) = N (0.2992)

Price = C = SN(d_1) - $Ke^{(-rt)}$ N(d2)

= 80 x N(d1) – (75/1.062) x N(d2)

Value of option

$$= 80\,N(d_1) - \frac{75}{1.062} \times N(d_2)$$

N(d1) = N (0.5820) = 0.7197

N(d2) = N(0.2992) = 0.6176

$$\text{Price} = 80 \times 0.7197 - \frac{75}{1.062} \times 0.6176$$

= ₹(57.57 – 70.62 x 0.6176)

= ₹(57.57 – 43.61)

= ₹13.96

9. Mr. B decides to purchase Two Infosys call options which have a delta of 0.75 each. He also plans to simultaneously hedge by buying Four Infosys Put Options which has a positive delta of 0.375. What is the net delta of each position? What is the net delta of overall position? Is he fully hedged?

Answer:

Delta of long calls and short puts are positive and that of short calls and long puts are negative. Deltas for call options are always positive, which means that a long call should be hedged with a short call position in the underlying asset and vice-versa. Deltas for put options are always negative which means that a long put should be hedged with a long position in the underlying asset and vice-versa. Delta is between 0 and +1 for calls and between 0 and -1 for puts.

Delta of Infosys for Call Position: (+2)x(+0.75)=+1.5

Delta of Infosys for Put Position: (+4)x(-0.375)=−1.5

Net Delta of entire position : +1.5−1.5 =0

Since net delta of the entire position is zero, Mr. B is perfectly hedged. This means that whatever losses he might incur the call position/put position would be compensated exactly in the put/call position.

10. Following information is available for two firms.

Firm	Objective	Fixed Rate	Floating Rate
A	Floating Rate	10%	LIBOR+0.75%
B	Fixed Rate	11%	LIBOR+1.00%

Explain how the two firms would enter into a swap transaction to reduce their interest costs, if Firm A does not want to pay more than LIBOR+0.35%.

Answer:

This is the interest rate swap without a bank intermediary.

Swap Design:

Step 1: Find the interest differential in fixed market. Here it is 100 bps.

Step 2: Find the interest differential in floating market. Here it is 25 bps.

Step 3: The quality spread is 75 bps (100-25) bps

Step 4: Firm's A objective is to go for floating payment but wants to pay LIBOR+0.35%. In other words, as against the market cost of LIBOR+0.75%, it wants to pay LIBOR+0.35% implying a savings of 0.40%. Out of possible 0.75% (quality spread), B would save 0.35% i.e. B's cost would be 10.65%.

11. Company P Ltd. and Q Ltd. have been offered the following rate per annum on a ₹200 crore five year loan:

Company	Fixed Rate	Floating Rate
P Ltd.	12.0%	MIBOR+0.1%
Q Ltd.	13.4%	MIBOR +0.6%

Company P Ltd. requires a floating rate loan and Q Ltd. requires a fixed rate loan.

You are required to design a swap arrangement that will net a bank acting as intermediary at 0.5% p.a. and be equally attractive to both the companies. Also find out the effective interest rates.

Answer:

Particulars	₹
(a) Difference in Floating Rates [(MIBOR + 0.1%) - (MIBOR + 0.6%)]	**0.5%**
(b) Difference in Fixed Rates [13.4% - 12%]	**1.4%**
(c) Net Difference {[(a) - (b)] in Absolute Terms}	**0.9%**
(d) Amount paid for arrangement of Swap Option	**(0.5%)**
(e) **net Gain [(c)- (d)]**	**0.4%**
(f) Company PQR's share of Gain [0.4% X 50%]	**0.2%**
(g) Company DEF's share of Gain [0.4% X 50%]	**0.2%**

P Ltd. Is the stronger Company (due to comparative interest advantage). P has an advantage of 1.40% in Fixed Rate and 0.50% in Floating Rate. Therefore, P Ltd. Enjoys a higher advantage in Fixed Rate loans. Therefore, P Ltd. Will opt for Fixed Rate Loans with its Bankers. Correspondingly Q Ltd. Will opt for Floating Rate Loans with its bankers.

P Ltd.	Q Ltd.
1. P Ltd. will borrow at fixed rate. 2. Pay interest to bankers at fixed rate (i.e. 12%) 3. Will collect from Company Q Ltd. interest amount differential i.e. Interest computed at fixed rate (12%) Less Interest Computed at Floating Rate of (MIBOR+0.1%)=11.9%-MIBOR 4. Receive share of gain from Company Q Ltd. (0.2%). 5. Effective Interest Rate = 2-3 = 12%-(11.9%- MIBOR) -0.2% = MIBOR-0.1%	1. Q Ltd. will borrow at Floating rate. 2. Pay interest to bankers at Floating rate (MIBOR+0.6%) 3. Will pay Company P Ltd. interest amount differential i.e. Interest computed at fixed rate (12%) Less Interest Computed at Floating Rate of (MIBOR+0.1%)=11.9%-MIBOR 4. Pay to Company P Ltd. its share of gain (0.2%). 5. Pay Commission Charges to the bank for arranging interest rate swap i.e. 0.5%. 6. Effective Interest Rate = (2+3+4+5)=MIBOR + 0.60 % + 11.9% - LIBOR + 0.5% + 0.2%=13.20%

12. X Ltd. and Y Ltd. both wish to raise USD 20 million loan for 5 years. X Ltd. has the choice of issuing fixed rate debt at 7.50% of floating rate debt at LIBOR + 25 bps. On the other, Y Ltd. which has a lower credit rating, can issue fixed rate debt of the same maturity at 8.45% or floating rate at LIBOR + 37 bps. X Ltd. prefers to issue floating rate debt and Y Ltd. prefers fixed rate debt with a lower coupon. City bank is in the process of arranging an interest rate swap between these two companies.

X Ltd. negotiates to pay the bank a floating rate of LIBOR while the bank agrees to pay X Ltd. a fixed rate of 7.60%.

Y Ltd. agrees to pay the bank a fixed rate of 7.75% while the bank pays Y Ltd. a floating rate of LIBOR flat.

You are required to:

(a) With a schematic diagram, show how the swap deal can be structured.

(b) What are interest savings by each company?

(c) How much would City Bank receive?

Answer:

Calculation of Quality Spread Differential

Company	Objective	Fixed Rate	Floating Rate
X Ltd.	Floating Rate	7.5% p.a.	LIBOR+0.25%
Y Ltd.	Fixed Rate	8.45%	LIBOR+0.37%
Difference in risk premium		0.95%	0.12%
Net Differential			0.83%

The differential between two markets = 0.83%

This needs to shared between X Ltd. and Y Ltd. and City Bank

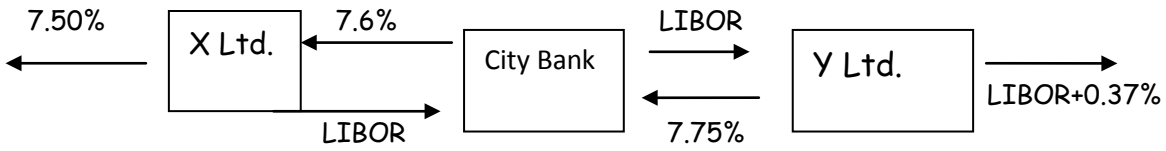

Economics of Swap Deal

	X Ltd.	**Bank**	**Y Ltd.**
Paid to lender	(7.50%)		(LIBOR+0.37%)
Bank pays to X Ltd.	7.60%	(7.60%)	-
Y Ltd. pays Bank	-	7.75%	(7.75%)
X Ltd. pays Bank	(LIBOR)	LIBOR	
Bank Pays Y Ltd.		(LIBOR)	LIBOR
Net Position	(LIBOR-0.10%)	0.15%	(8.12%)
Cost without Swap	LIBOR+0.25%	-	8.45%
Gain	0.35%	0.15%	0.33%

(ii) Savings

X Ltd.: [LIBOR + 0.25% + 7.60% - 7.50% - LIBOR) = 0.35%

Y Ltd.: [8.45% + LIBOR - 7.75% - LIBOR - 0.37%] = 0.35%

(iii) Gain to City Bank

LIBOR - LIBOR + 7.75%-7.60% = 0.15%

Study Note – 11

FINANCIAL RISK MANAGEMENT IN INTERNATIONAL OPERATIONS

Learning Objective: ***From this chapter, students will able to:***

- ***understand foreign exchange market and determine exchange rate***

1. Choose the correct alternative

(i) The price of a bond just before a year of maturity is $10,000. Its redemption value is $10500 at the end of the that period. Interest is $700 p.a. The Dollar appreciates by 2% during the that period. The rate of return would be----

(a) 12%

(b) 12.5%

(c) 13.25%

(d) 14%

(ii) Arbitrage pricing theory model helps to

(a) Reduce risk

(b) Eliminate arbitrage

(c) Identify the equilibrium asset price

(d) None of the above

(iii) In July, the one year interest rate is 4% on Swiss Francs and 13% on US dollars. If the current exchange rate SFr 1=$0.63, what is the expected future exchange rate in one year?

(a) $ 0.5561

(b) $ 0.6845

(c) $ 0.8542

(d) $ 0.8283

(iv) Between 2000 and 2015, the ¥/$ exchange rate moved from ¥226.63 to ¥93.96. During this same 15 year period, the consumer price index (CPI) in Japan rose from 91.0 to 119.2 and the US CPI rose from 82.4 to 152.4. If PPP held over this period, what would the ¥/$ exchange rate have been in 2015?

(a) ¥ 140.13

(b) ¥ 152.15

(c) ¥160.51

(d) ¥ 180.18

(v) The 90-day interest rate is 1.85% in USA and 1.35% in the UK and the current spot exchange rate is $1.6/£. The 90-day forward rate is-

(a) $1.607893

(b) $ 1.901221

(c) $ 1.342132

(d) $ 1.652312

(vi) The current spot rate for the U.S. dollar is ₹66. The expected inflation rate is 6.5% in India and 3% in USA. The expected rate of dollar a year hence is --

(a) ₹72.33

(b) ₹72.12

(c) ₹69.33

(d) ₹66.89

(vii) The following rates are prevailing: Euro/$:1.1916/1.1925 and $/£:1.42/1.47 what will be the cross rate?

(a) 1.6921/1.7530

(b) 1.7530/1.6921

(c) 1.6921/1.1925

(d) 1.7530/1.1916

(viii) The following rates appear in the foreign exchange market:

	Spot Rate	2 Month Forward
₹/US$	₹45.80/46.05	₹46.50/47.00

How many dollars should a firm sell to get ₹ 5 crore after 2 months?

(a) $105500

(b) $106500

(c) $107500

(d) $108500

Answer:

Question	(i)	(ii)	(iii)	(iv)	(v)	(vi)	(vii)	(viii)
Answer:	(a)	(c)	(b)	(c)	(a)	(d)	(a)	(c)

2. What is Foreign Exchange Market? What are its important functions?

Answer:

The **Foreign Exchange Market** (**Forex**, **FX**, or **currency market**) is a form of exchange for the global decentralized trading of international currencies. Financial centers around the world function as anchors of trading between a wide range of buyers and sellers around the clock, with the exception of weekends. The foreign exchange market determines the relative values of different currencies. The foreign exchange market assists international trade and investment by enabling currency conversion. For example, it permits a business in the United States to import goods from the European Union member states, especially Euro zone members, and pay Euros, even though its income is in United States dollars. It also supports direct speculation in the value of currencies, and the carry trade, speculation based on the interest rate differential between two currencies.

The foreign exchange market performs the following important functions:

(i) to effect transfer of purchasing power between countries- transfer function;

(ii) to provide credit for foreign trade - credit function; and

(iii) to furnish facilities for hedging foreign exchange risks - hedging function.

3. Identify and briefly discuss the determinants of foreign exchange rates.

Answer:

The determinants of foreign exchange rates are as follows:

(i) **Interest Rate Differentials:** Higher rate of interest for a investment in a particular currency can push up the demand for that currency, which will increase the exchange rate in favour of that currency.

(ii) **Inflation Rate Differentials:** Different countries' have differing inflation rates, and as a result, purchasing power of one currency will depreciate faster than currency of some other country. This contributes to movement in exchange rate.

(iii) **Government Policies:** Government may impose restriction on currency transactions. Through RBI, the Government, may also buy or sell currencies in huge quantity to adjust the prevailing exchange rates.

(iv) **Market Expectations:** Expectations on changes in Government, changes in taxation policies, foreign trade, inflation, etc. contributes to demand for foreign currencies, thereby affecting the exchange rates.

(v) **Investment Opportunities:** Increase in investment opportunities in one country leads to influx of foreign currency funds to that country. Such huge inflow will amount to huge supply of that currency, thereby bringing down the exchange rate.

(vi) **Speculations:** Speculators and Treasury Managers influence movement in exchange rates by buying and selling foreign currencies with expectations of gains by exploiting market inefficiencies. The quantum of their operations affects the exchange rates.

4. Discuss the process for raising Equity through ADR.

Answer:

The processes for raising Equity through ADR are **as follows:**

(a) **Issue Intermediaries**: ADRs are issued by Overseas Depository Bank (ODB), who has a Domestic Custodian Bank (DCB) in India.

(b) **Deposit of Securities**: Company willing to raise equity through ADRs should deposit the securities with the DCB in India.

(c) **Authorization for Issue of ADRs**: The Indian Company authorizes the ODB to issue ADR against the security of Company's Equity Shares.

(d) **Issue of ADR**: ODB issues ADRs to investors at a predetermined ratio to the Company's securities.

(e) **Redemption of ADR**: When an investor redeems his ADRs, the appropriate number of underlying equity shares or bonds is released.

(f) **Dividend / Interest**: The Indian Company pays interest to the ODB, which in turn distributes dividends to the ADR holders based on the prevailing exchange rate.

5. Who Can Invest in P-Notes?

Answer:

The following persons/entities are eligible to invest in P-Notes:

(a) Any entity incorporated in a jurisdiction that requires filing of constitutional and/or other documents with a registrar of companies or comparable regulatory agency or body under the applicable companies legislation in that jurisdiction;

(b) Any entity that is regulated, authorized or supervised by a central bank, such as the Bank of England, the Federal Reserve, the Hong Kong Monetary Authority, the Monetary Authority of Singapore or any other similar body provided that the entity must not only be authorized but also be regulated by the aforesaid regulatory bodies;

(c) Any entity that is regulated, authorized or supervised by securities or futures commission, such as the Financial Services Authority (UK), the Securities and Exchange Commission, the Commodities Futures Trading Commission, the Securities and Futures Commission (Hong Kong or Taiwan), Australia Securities and Investments Commission (Australia) or other securities or futures authority or commission in any country, state or territory;

(d) Any entity that is a member of securities or futures exchanges such as the New York Stock Exchange (Subaccount),London Stock Exchange (UK), Tokyo Stock Exchange (Japan), NASD (Sub-account) or other similar self-regulatory securities or futures authority or commission within any country, state or territory provided that the aforesaid organizations which are in the nature of self-regulatory organizations are ultimately accountable to the respective securities / financial market regulators.

(e) Any individual or entity (such as fund, trust, collective investment scheme, Investment Company or limited partnership) whose investment advisory function is managed by an entity satisfying the criteria of (a), (b), (c)or (d) above.

6. Identify the issues relating to International Capital Budgeting.

Answer:

The decision to invest abroad takes a concrete shape when a future project is evaluated in order to ascertain whether the implementation of the project is going to add to the value of the investing company. The evaluation of the long term investment project is known as capital budgeting. The technique of capital budgeting is almost similar between a domestic company and an international company. However, the one has to address the following issues related to International Capital Budgeting:

(a) Exchange rate fluctuations capital market segmentation,

(b) International financing arrangement of capital and related to cost of capital,

(c) International taxation,

(d) Country risk or political risk etc.

7. Who are the Participants in Foreign Exchange Market?

Answer:

The participants of Foreign Exchange Market are:

(i) Commercial companies: An important part of this market comes from the financial activities of companies seeking foreign exchange to pay for goods or services.

(ii) Central banks: National central banks play an important role in the foreign exchange markets. They try to control the money supply, inflation, and/or interest rates and often have official or unofficial target rates for their currencies.

(iii) Hedge funds as speculators: About 70% to 90%of the foreign exchange transactions are speculative. In other words, the person or institution that buys or sells the currency has no plan to actually take delivery of the currency in the end; rather, they are solely speculating on the movement of that particular currency. They control billions of dollars of equity and may borrow billions more, and thus may overwhelm intervention by central banks to support almost any currency, if the economic fundamentals are in the hedge funds' favor.

(iv) Investment management firms: Investment management firms (who typically manage large accounts on behalf of customers such as pension funds and endowments) use the foreign exchange market to facilitate transactions in foreign securities.

(v) Retail foreign exchange traders: Individual Retail speculative traders constitute a growing segment of this market with the advent of retail foreign exchange platforms, both in size and importance. Currently, they participate indirectly through brokers or banks. There are two main types of retail FX brokers offering the opportunity for speculative currency trading: brokers and dealers or market makers.

(vi) Non-bank Foreign Exchange Companies: Non-bank foreign exchange companies offer currency exchange and international payments to private individuals and companies. These are also known as foreign exchange brokers but are distinct in that they do not offer speculative trading but rather currency exchange with payments (i.e., there is usually a physical delivery of currency to a bank account).

(vii) Money transfer/remittance companies and bureau de change: Money transfer companies/remittance companies perform high-volume low-value transfers generally by economic migrants back to their home country. The four largest markets receiving foreign remittances are India, China, Mexico and the Philippines. The largest and best known provider is Western Union with 345,000 agents globally followed by UAE Exchange.

8. You are given the following information –

$/£	**1.3690/1.3728**
S.Fr/DEM	**1.0050/1.0098**
$/S.Fr	**0.8810 / 0.8823**
And if DEM / £ in the market are 1.5580 /1.5596	

You are required to find out any arbitrage opportunity exists.

If so, show how $20,000 available with you can be used to generate risk - less profit.

Answer:

Calculation of Cross Rate

(a) Bid [DEM / £] = Bid [$ / £] x Bid [S Fr. / $] x Bid [DEM / S Fr.]

= Bid [$ / £] x 1 / Ask [$ / S Fr.] x 1 / Ask [S Fr. / DEM)

= 1.3690x 1 / 0.8823x 1 / 1.0098

= 1.55902

(b) Ask [DEM/£] = Ask [$ / £] X Ask [S Fr./$] X Ask [DEM / S Fr.]

= Ask [$ / £] X 1/ Bid [$ / S Fr.] X 1 / Bid [S Fr. / DEM]

= 1.3728x 1/0.8810 x 1/1.0050

= 1.55048

	Cross Rate	Market Rate
DEM / £	1.55902-1.55048	1.5580 /1.5596

Since both the rates are apart there exist an arbitrage opportunity.

Nature of Quote	Buying Foreign Currency (Converting Home Currency into Foreign Currency)	Buying Foreign Currency (Converting Home Currency into Foreign Currency)
Direct Quote, relevant rate is	Ask Rate	Bid Rate
Indirect Quote, relevant rate is	1 ÷ Bid Rate	1 ÷ Ask Rate

Gain of US $ 97.04

US $ (20097.04- 20,000)

Ascertain the value of Call Options

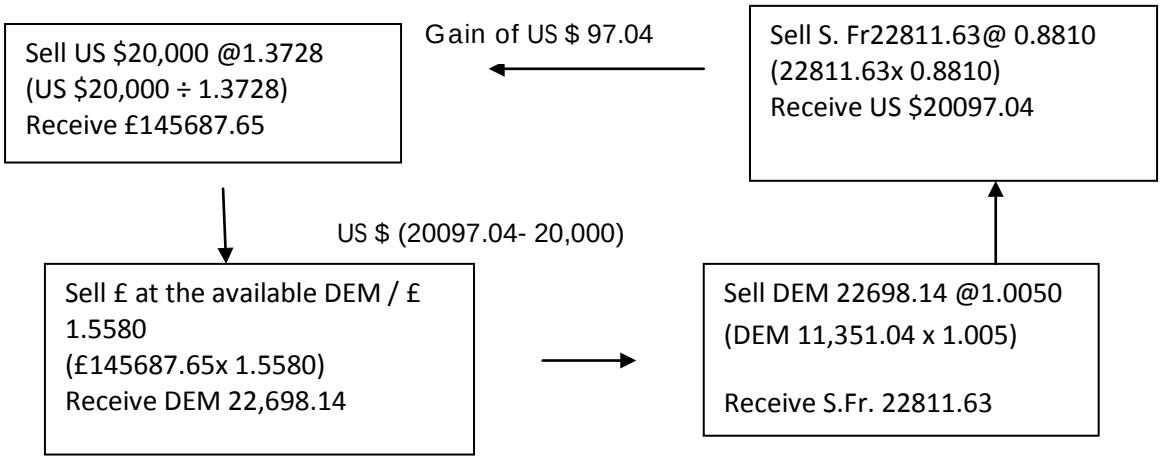

9. S Ltd. an Indian based company has subsidiaries in US and UK whose forecast surplus fund for the next 30 days (June 2018) are given below:

US subsidiary: $ 12.00 million

UK subsidiary: £ 6.00 million

The following information pertaining to exchange rates are obtained:

	$/₹	£/₹
Spot	**0.0243**	**0.0148**
30 days forward	**0.0245**	**0.0150**

The borrowing/deposit rates per annum (simple) are available:

₹	**8.4%/7.5%**
$	**1.6%/1.5%**
£	**4.0%/3.8%**

The Indian operation is forecasting a cash deficit of ₹400 million. It is assumed that interest rates based on over a year of 360 days.

Required:

(i) Calculate the cash balance in Rupees at the end of 30 days period (at the end of June 2018) for each company under each of the following scenarios ignoring transaction costs and taxes:

(a) Each company invests/finance its own cash balance/deficits in local currency independently.

(b) Cash balances are pooled immediately in India and the net balances are invested/borrowed for the 30 days period.

(ii) Which method do you think preferable from the parent company's (S Ltd.) point of view?

Answer:

(a) Computation of Cash Balances at the end of 30 days of S Ltd. (At the end of June 2018)

(i) Acting Independently

(Figures in million)

Particulars	India	US Subsidiary	UK Subsidiary
Surplus/Deficit	(₹ 400)	$ 12.00	£ 6.00
Interest on Investment	7.50%	1.50%	3.80%
Interest on borrowing	8.40%	1.60%	4.00%
Interest	400×(0.084/12)=2.80	12×(0.015/12)=0.015	6×(0.038/12)=0.019
Values after adjusting interest	(₹ 402.80)	($ 12.015)	(£ 6.019)
Values in Rupee term (using forward rate)	(₹ 402.80)	(₹ 490.408) (12.015/0.0245)	(₹ 491.267) (6.019/0..150)

Net value in Rupees (Balance):

= ₹ (402.80)+490.408+491.267

= ₹ 488.875 million

(ii) Cash balance are pooled immediately

(Figure in million)

Particulars	₹
India	(400.00)
US Subsidiary (12.00/0.0243) [Spot rate]	493.827
UK Subsidiary (6.00/0.0148) [Spot rate]	405.405
Immediate cash balance	499.232
Interest for 30 days [499.232×(0.075/12)]	3.120
Cash balance at the end of 30 days	502.352

(b) Decision from S Ltd.'s point of view:

From S Ltd.'s point of view 'immediate cash pooling to India' is preferable as it maximizes the total cash balance of the company after 30 days comparing to acting independently.

10. On 19th April 2018 the following are the spot rates:

Spot EURO/USD 1.20000 USD/INR 44.8000

Following are the quotes of European Options:

Currency Pair	Call/Put	Strike Price	Premium	Expiry Date
EURO/USD	Call	1.2000	$ 0.035	July, 19
EURO/USD	Put	1.2000	$ 0.04	July 19
USD/INR	Call	44.8000	₹ 0.12	Sep 19
USD/INR	Put	44.8000	₹ 0.04	Sep 19

(i) A trader sells an at-the-money spot straddle expiring at three months (July 19). Calculate gain or loss if three months later the spot rate is EURO/USD 1.2900.

(ii) Which strategy gives a profit to the dealer if five months later (Sep. 19) expected spot rate is USD/INR 45.00. Also calculate profit for a transaction USD 1.5 million.

Answer:

(i) Straddle is a portfolio of a Call and a Put option with identical Strike price. A trader sells Straddle of at the Money Straddle by selling a call option and put option with strike price of USD per EURO.

He will receive premium of $ 0.035+$0.040=$ 0.075.

At the expiry of three months spot rate is 1.2900 i.e. higher than Strike Price. Hence, buyers of the call option will exercise the option, but buyer of Put option will allow the option to lapse.

Profit or loss to a trader is:

Premium received	$0.075
Loss on call option exercised (1.2900-1.200)	$0.090

So the Net loss is $(0.075-0.090)=$0.015 per EURO.

(ii) BUY Strategy i.e. either Call or Put:

When price is expected to go up then call option is beneficial,

On 19th April to pay premium 15,00,000 @₹0.12 i.e.	₹ 1,80,000
On 19th September exercise call option to gain 15,00,000 @₹0.20	₹ 3,00,000
Net Gain or Profit	**₹ 1,20,000**

11. X Ltd. an Indian company has a payable of US$ 1,00,000 due in 3 months. The company is considering to cover the payable through the following alternatives:

(i) Forward contract,

(ii) Money market

(iii) Option

The following information is available with the company:

Exchange rate:

Spot	**₹/$45.50/45.55**
3-m Forward	**45.90/46.00**
Interest Rate (%):	**Per annum**
US	**4.5/5.0 (Deposit/Borrow)**
India	**10.0/11.0 (Deposit/Borrow)**

Call option on $ with a strike price of ₹46is available at a premium of ₹ 0.10/$. Put option on $ with a strike price of ₹46.00 is available with a premium of ₹0.05/$.

Treasury department of the company forecasted the future spot rate after 3 months to be:

Spot rate after 3-m	**Probability**
₹ 45.60/$	**0.10**
₹46.00/$	**0.60**
₹46.40/$	**0.30**

You are required to suggest the best alternative of hedging.

Answer:

Exchange rate:	₹/$
Spot:	45.50/45.55
3-m forward:	45.90/46.00
3-m interest rate	**(%)**
US	4.5/5.0
India	10.0/11.0

(i) Forward Hedge:

After 3-m, outflow of ₹for the month is ₹(1,00,000×46.00)=₹46,00,000

(ii) Forward Hedge

The firm should borrow ₹and convert it into $ at the spot rate. Then the $ proceeds for 3 –m to be invested and the payable will be settled at maturity out of the $ investment.

$ to be invested to get $ 1,00,000 3-m hence is: $\frac{1,00,000}{1+\frac{0.045}{4}}$ = $98,887.52

To get $ 98,887.52 the amount of ₹ required is = (98,887.52×45.55) = ₹45,04,326.54. So, the firm has to borrow a sum of ₹45,04,326.54.

Hence, rupee repayment after 3-m is = ₹45,04,326.54 × 1 + $\frac{0.11}{4}$ = ₹46,28,195.52

(iii) Option Hedge

Since the firm has a $ liability, it should go long on call $ option. That means the firm will buy $ call option with a strike price of₹46.00 at a premium of₹0.10/$.

So, total premium paid is₹(1,00,000×0.10) = ₹10,000.

Possible spot rate after 3-m (/$)	Whether to exercise Option	Total outflow	Probability
45.60	No	45,70,000	0.10
46.00	No	46,10,000	0.60
46.40	Yes	46,00,000	0.30

Expected rupee outflow after 3 month is

= ₹ (45,70,000×0.10)+(46,10,000×0.60)+ (46,10,000×0.30) = ₹**46,06,000**

The firm can also go short on the put option, that is sell $ put option with a strike price of ₹46.00 at a premium of ₹ 0.05/$.

Total premium received is ₹(1,00,000×0.05)= ₹5,000

Possible spot rate after 3-m (/$)	Whether to exercise Option	Total outflow	Probability
45.60	No	45,95,000	0.10
46.00	No	45,95,000	0.60
46.40	Yes	46,35,000	0.30

Expected rupee outflow after 3 month is

= ₹ (45,95,000×0.10)+(45,95,000×0.60)+ (46,35,000×0.30) = ₹**46,07,000**

Suggestion: 'Forward Hedge' is suggested for X Ltd. to cover the payable since the rupee outflow is less than the outflow under money market hedge and also less than the expected outflow under option covers.

12. X Ltd., an Indian Exporter has an ongoing order from USA for 2000 pieces per month at a price of $100 per piece. To execute the order, the exporter has to import Yen 6000 worth of material per piece. Labour costs are ₹350 per piece while other variable overheads add upto ₹ 700 per piece. The exchange rates are currently ₹35/$ and Yen 120/$. Assuming that the order will be executed after 3 months and payment is obtained immediately on shipment of goods, calculate the loss/gain due to transaction exposure if the exchange rates change to ₹36/$ and Yen 110/$.

Answer:

(a) At the existing level of exchange rates,

Revenues	= (2000x100x35)	= ₹ 70,00,000	
Less: Costs			
Material:	(2000)x[(6000)x(35/120)]	= ₹ 35,00,000	
Labour	(2000)x(350)	= ₹ 7,00,000	
Overhead	(2000)x(700)	= ₹14,00,000	= ₹56,00,000
Profit			**= ₹14,00,000**

(b) **After the exchange rate changes**

Revenues	= (2000x100x36)	= ₹7200,000	
Less: Costs			
Material:	(2000)x[(6000)x(35/110)]	= ₹3818,182	
Labour	(2000)x(350)	= ₹700,000	
Overhead	(2000)x(700)	= ₹1400,000	= ₹5918,182
Profit			**= ₹1281,818**

So, Loss due to transaction exposure = **₹1400,000** – **₹1281,818** = **₹118,818**

THE INSTITUTE OF COST ACCOUNTANTS OF INDIA

(Statutory body under an Act of Parliament)

Website : www.icmai.in
Email: studies@icmai.in
Toll Free: 1800 345 0092 / 1800 110 910

Follow us on

HEADQUARTERS
CMA Bhawan
12, Sudder Street, Kolkata - 700 016
Ph: +91-33-2252-1031/34/35/1602/
1492/1619/7373/7143
Fax: +91-33-2252-7993/1026/1723

DELHI OFFICE
CMA Bhawan
3, Institutional Area, Lodhi Road
New Delhi - 110003
Ph: + 91-11-24666100/24666124/24666122
Fax: +91-11-43583642

Behind Every Successful Business Decision, there is always a CMA